Service Manual

AV7005 / N1B/U1B

AV Pre Tuner

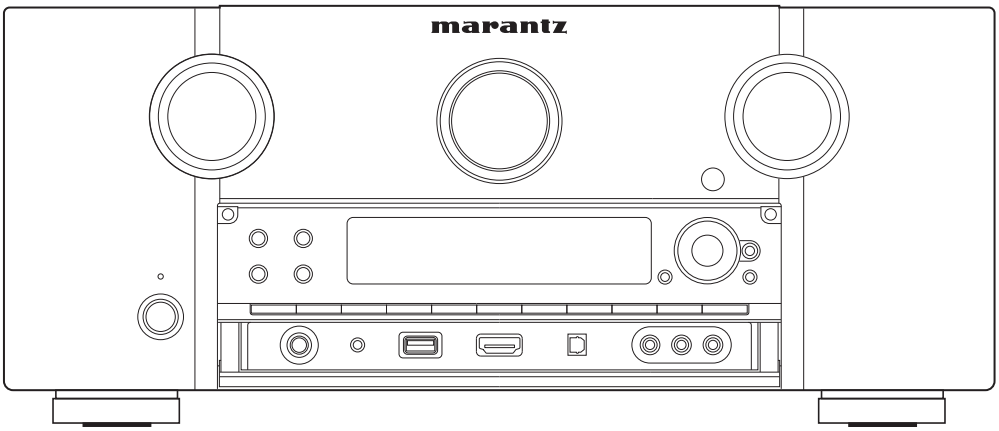

- For purposes of improvement, specifications and design are subject to change without notice.
- Please use this service manual with referring to the operating instructions without fail.
- Some illustrations using in this service manual are slightly different from the actual set.

marantz®

AV7005

Ver. 3

Please refer to the MODIFICATION NOTICE.

S0195-1V03DM/DG1011

Copyright 2010 D&M Holdings Inc. All rights reserved.
WARNING: Violators will be prosecuted to the maximum extent possible.

MARANTZ DESIGN AND SERVICE

Using superior design and selected high grade components, **MARANTZ** company has created the ultimate in stereo sound. Only original **MARANTZ** parts can insure that your **MARANTZ** product will continue to perform to the specifications for which it is famous.

Parts for your **MARANTZ** equipment are generally available to our National Marantz Subsidiary or Agent.

ORDERING PARTS :

Parts can be ordered either by mail or by Fax.. In both cases, the correct part number has to be specified.

The following information must be supplied to eliminate delays in processing your order :

1. Complete address
2. Complete part numbers and quantities required
3. Description of parts
4. Model number for which part is required
5. Way of shipment
6. Signature : any order form or Fax. must be signed, otherwise such part order will be considered as null and void.

USA

MARANTZ AMERICA, INC
100 CORPORATE DRIVE
MAHWAH, NEW JERSEY 07430
USA

EUROPE / TRADING

D&M EUROPE B. V.
P. O. BOX 8744, BUILDING SILVERPOINT
BEEMDSTRAAT 11, 5653 MA EINDHOVEN
THE NETHERLANDS
PHONE : +31 - 40 - 2507844
FAX : +31 - 40 - 2507860

CANADA

D&M Canada Inc.
5-505 APPLE CREEK BLVD.
MARKHAM, ONTARIO L3R 5B1
CANADA
PHONE : 905 - 415 - 9292
FAX : 905 - 475 - 4159

JAPAN

D&M Holdings Inc.
D&M BUILDING, 2-1 NISSHIN-CHO,
KAWASAKI-KU, KAWASAKI-SHI,
KANAGAWA, 210-8569 JAPAN

株式会社 ディーアンドエムホールディングス

本　社　〒210-8569
神奈川県川崎市川崎区日進町2-1 D&Mビル

KOREA

D&M SALES AND MARKETING KOREA LTD.
2F,YEON BLDG.,
88-5, BANPO-DONG, SEOCHO-GU,
SEOUL KOREA
PHONE : +82 - 2 - 715 - 9041
FAX : +82 - 2 - 715 - 9040

CHINA

D&M SALES AND MARKETING SHANGHAI LTD.
ROOM.808 SHANGHAI AIRPORT CITY TERMINAL
NO.1600 NANJING (WEST) ROAD, SHANGHAI,
CHINA. 200040
TEL : 021 - 6248 - 5151
FAX : 021 - 6248 - 4434

NOTE ON SAFETY :

Symbol ⚠ Fire or electrical shock hazard. Only original parts should be used to replaced any part marked with symbol ⚠.

Any other component substitution (other than original type), may increase risk of fire or electrical shock hazard.

安全上の注意：

⚠がついている部品は、安全上重要な部品です。必ず指定されている部品番号の部品を使用して下さい。

SHOCK, FIRE HAZARD SERVICE TEST :

CAUTION : After servicing this appliance and prior to returning to customer, measure the resistance between either primary AC cord connector pins (with unit NOT connected to AC mains and its Power switch ON), and the face or Front Panel of product and controls and chassis bottom.

Any resistance measurement less than 1 Megohms should cause unit to be repaired or corrected before AC power is applied, and verified before it is return to the user/customer.

Ref. UL Standard No. 60065.

In case of difficulties, do not hesitate to contact the Technical Department at above mentioned address.

091105DM/DG

SAFETY PRECAUTIONS

The following check should be performed for the continued protection of the customer and service technician.

LEAKAGE CURRENT CHECK

Before returning the unit to the customer, make sure you make either (1) a leakage current check or (2) a line to chassis resistance check. if the leakage current exceeds 0.5 milliamps, or if the resistance from chassis to either side of the power cord is less than 460 kohms, the unit is defective.
Be sure to test for leakage current with the AC plug in both polarities, in addition, in each power ON, OFF and STANDBY mode, if applicable.

CAUTION **Please heed the points listed below during servicing and inspection.**

◎ Heed the cautions!

Spots requiring particular attention when servicing, such as the cabinet, parts, chassis,etc., have cautions indicated on labels. be sure to heed these causions and the cautions indicated in the handling instructions.

◎ Caution concerning electric shock!

(1) An AC voltage is impressed on this set, so touching internal metal parts when the set is energized could cause electric shock. Take care to avoid electric shock, by for example using an isolating transformer and gloves when servicing while the set is energized, unplugging the power cord when replacing parts, etc.

(2) Tere are high voltage parts inside. Handle with extra care when the set is energized.

◎ Caution concerning disassembly and assembly!

Through great care is taken when manufacturing parts from sheet metal, there may in some rare cases be burrs on the edges of parts which could cause injury if fingers are moved across them. Use gloves to protect your hands.

◎ Only use designated parts!

The set's parts have specific safety properties (fire resistance, voltage resistance, etc.). For replacement parts, be sure to use parts which have the same poroperties. In particular, for the important safety parts that are marked ⚠ on wiring diagrams and parts lists, be sure to use the designated parts.

◎ Be sure to mount parts and arrange the wires as they were originally!

For safety seasons, some parts use tape, tubes or other insulating materials, and some parts are mounted away from the surface of printed circuit boards. Care is also taken with the positions of the wores omsode amd clamps are used to keep wires away from heating and high voltage parts, so be sure to set everything back as it was originally.

◎ Inspect for safety after servicing!

Check that all screws, parts and wires removed or disconnected for servicing have been put back in their original positions, inspect that no parts around the area that has been serviced have been negatively affected, conduct an inslation check on the external metal connectors and between the blades of the power plug, and otherwise check that safety is ensured.

(Insulation check procedure)
Unplug the power cord from the power outlet, disconnect the antenna, plugs, etc., and turn the power switch on. Using a 500V insulation resistance tester, check that the inplug and the externally exposed metal parts (antenna terminal, headphones terminal, input terminal, etc.) is 1MΩ or greater. If it is less, the set must be inspected and repaired.

CAUTION **Concerning important safety parts**

Many of the electric and structural parts used in the set have special safety properties. In most cases these properties are difficult to distinguish by sight, and using replacement parts with higher ratings (rated power and withstand voltage) does not necessarily guarantee that safety performance will be poreserved. Parts with safety properties are indicated as shown below on the wiring diagrams and parts lists is this service manual. Be sure to replace them with parts with the designated part number.

(1) Schematic diagrams .....Indicated by the ⚠ mark.
(2) Parts lists .....Indicated by the ⚠ mark.
Using parts other than the designated parts could result in electric shock, fires or other dangerous situations.

NOTE FOR SCHEMATIC DIAGRAM

WARNING:

Parts marked with this symbol ⚠ have critical characteristics. Use ONLY replacement parts recommended by the manufacturer.

CAUTION:

Before returning the unit to the customer, make sure you make either (1) a leakage current check or (2) a line to chassis resistance check. If the leakage current exceeds 0.5 milliamps, or if the resistance from chassis to either side of the power cord is less than 460 kohms, the unit is defective.

WARNING:

DO NOT return the unit to the customer until the problem is located and corrected.

NOTICE:

ALL RESISTANCE VALUES IN OHM. k=1,000 OHM / M=1,000,000 OHM
ALL CAPACITANCE VALUES IN MICRO FARAD. P=MICRO-MICRO FARAD EACH VOLTAGE AND CURRENT ARE MEASURED AT NO SIGNAL INPUT CONDITION. CIRCUIT AND PARTS ARE SUBJECT TO CHANGE WITHOUT PRIOR NOTICE.

NOTE FOR PARTS LIST

1. Parts for which "nsp" is indicated on this table cannot be supplied.
2. When ordering of part, clearly indicate "1" and "I" (i) to avoid mis-supplying.
3. Ordering part without stating its part number can not be supplied.
4. Part indicated with the mark "★" is not illustrated in the exploded view.
5. Not including General-purpose Carbon Film Resistor in the P.W.Board parts list. (Refer to the Schematic Diagram for those parts.)
6. Not including General-purpose Carbon Chip Resistor in the P.W.Board parts list. (Refer to the Schematic Diagram for those parts.)

WARNING: Parts marked with this symbol ⚠ have critical characteristics. Use ONLY replacement parts recommended by the manufacturer.

● Resistors

Ex.: RN | 14K | 2E | 182 | G | FR

Type	Shape and performance	Power	Resistance	Allowable error	Others
RD : Carbon		2B : 1/8 W	F : ±1%		P : Pulse-resistant type
RC : Composition		2E : 1/4 W	G : ±2%		NL : Low noise type
RS : Metal oxide film		2H : 1/2 W	J : ±5%		NB : Non-burning type
RW: winding		3A : 1 W	K : ±10%		FR : Fuse-resistor
RN : Metal film		3D : 2 W	M : ±20%		F : Lead wire forming
RK : Metal mixture		3F : 3 W			
		3H : 5 W			

* Resistance

1 8 2 ⇨ 1800ohm=1.8kohm
- 2 → Indicates number of zeros after effective number.
- 18 → 2-digit effective number.

1 R 2 ⇨ 1.2ohm
- 2 → 1-digit effective number.
- 1R → 2-digit effective number, decimal point indicated by R.

: Units: ohm

● Capacitors

Ex.: CE | 04W | 1H | 3R2 | M | BP

Type	Shape and performance	Dielectric strength	Capacity	Allowable error	Others
CE : Aluminum foil electrolytic		0J : 6.3 V	F : ±1%		HS : High stability type
CA : Aluminium solid electrolytic		1A : 10 V	G : ±2%		BP : Non-polar type
CS : Tantalum electrolytic		1C : 16 V	J : ±5%		HR : Ripple-resistant type
CQ : Film		1E : 25 V	K : ±10%		DL : For change and discharge
CK : Ceramic		1V : 35 V	M : ±20%		HF : For assuring high requency
CC : Ceramic		1H : 50 V	Z : ±80%		U : UL part
CP : Oil		2A : 100 V	: - 20%		C : CSA part
CM: Mica		2B : 125 V	P : +100%		W : UL-CSA part
CF : Metallized		2C : 160 V	C : ±0.25pF		F : Lead wire forming
CH : Metallized		2D : 200 V	D : ±0.5pF		
		2E : 250 V	= : Others		
		2H : 500 V			
		2J : 630 V			

* Capacity (electrolyte only)

2 2 2 ⇨ 2200 μF
- 2 → Indicates number of zeros after effective number.
- 22 → 2-digit effective number.

・Units: μF.

2 R 2 ⇨ 2.2 μF
- 2 → 1-digit effective number.
- 2R → 2-digit effective number, decimal point indicated by R

・Units: μF.

* Capacity (except electrolyte)

2 2 2 ⇨ 2200pF=0.0022 μF
- 2 → Indicates number of zeros after efective number. (More than 2)
- 22 → 2-digit effective number.

・Units:pF

2 2 1 ⇨ 220pF
- 1 → Indicates number of zeros after effective numver. (0 or 1)
- 22 → 2-digit effective number.

・Units:pF

・ When the dielectric strength is indicated in AC,"AC" is included after the dieelectric strength value.

TECHNICAL SPECIFICATIONS

❑ Audio Section

- **Analog**

Input sensitivity/Input impedance : 200 mV/47 kΩ
Frequency response : 10 Hz – 100 kHz — +1, –3 dB (DIRECT mode)
S/N : 105 dB (IHF–A weighted, DIRECT mode)
Distortion : 0.005 % (20 Hz ~ 20 kHz) (DIRECT mode)
Rated output : Unbalanced pre-output: 1.2 V
Balanced pre-output: 2.4 V

- **Digital**

D/A output : Rated output — 2 V (at 0 dB playback)
Total harmonic distortion — 0.008 % (1 kHz, at 0 dB)
S/N ratio — 102 dB
Dynamic range — 100 dB
Digital input : Format — Digital audio interface

- **Phono equalizer (PHONO input — REC OUT)**

Input sensitivity : 2.5 mV
RIAA deviation : ±1 dB (20 Hz to 20 kHz)
S/N : 74 dB (A weighting, with 5 mV input)
Rated output : 150 mV
Distortion factor : 0.03 % (1 kHz, 3 V)

❑ Video Section

- **Standard video connectors**

Input/output level and impedance : 1 Vp-p, 75 Ω
Frequency response : 5 Hz – 10 MHz — +1, –3 dB

- **Color component video connector**

Input/output level and impedance:
Y (brightness) signal — 1 Vp-p, 75 Ω
P_B / C_B signal — 0.7 Vp-p, 75 Ω
P_R / C_R signal — 0.7 Vp-p, 75 Ω
Frequency response :
5 Hz – 60 MHz — +0, –3 dB (when "Video Convert" set to "OFF")

❑ Tuner section (for U)

[FM](Note: µV at 75 Ω, 0 dBf = 1 x 10^{-15} W)
Receiving Range :
[FM] 87.5 MHz – 107.9 MHz **[AM]**530 kHz – 1710 kHz
Usable Sensitivity :
[FM]1.5 µV (14.8 dBf) **[AM]**18 µV
S/N (IHF-A) :
[FM]MONO 78 dB **[AM]**
STEREO 68 dB
HD 85 dB 85 dB
Total harmonic Distortion (at 1 kHz) :
[FM]MONO 0.1 % **[AM]**
STEREO 0.2 %
HD 0.02 % 0.02 %

❑ Tuner section (for N)

[FM](Note: µV at 75 Ω, 0 dBf = 1 x 10^{-15} W)
Receiving Range :
[FM] 87.5 MHz – 108.0 MHz **[AM]**522 kHz – 1611 kHz
Usable Sensitivity :
[FM]1.2 µV (12.8 dBf) **[AM]**18 µV
S/N (IHF-A) :
[FM]MONO 72 dB
STEREO 67 dB
Total harmonic Distortion (at 1 kHz) :
[FM]MONO 0.3 %
STEREO 0.7 %

❑ General

Power supply (for U) **:** AC 120 V, 60 Hz
Power supply (for N) **:** AC 230 V, 50 Hz
Power consumption :
60 W
0.2 W (Standby)
4.0 W (CEC standby)
Maximum external dimensions : 440 (W) x 187 (H) x 395 (D) mm
Weight : 10.1 kg

❑ Remote Control Unit (RC011SR)

Batteries : R03/AAA Type (two batteries)

DIMENSION

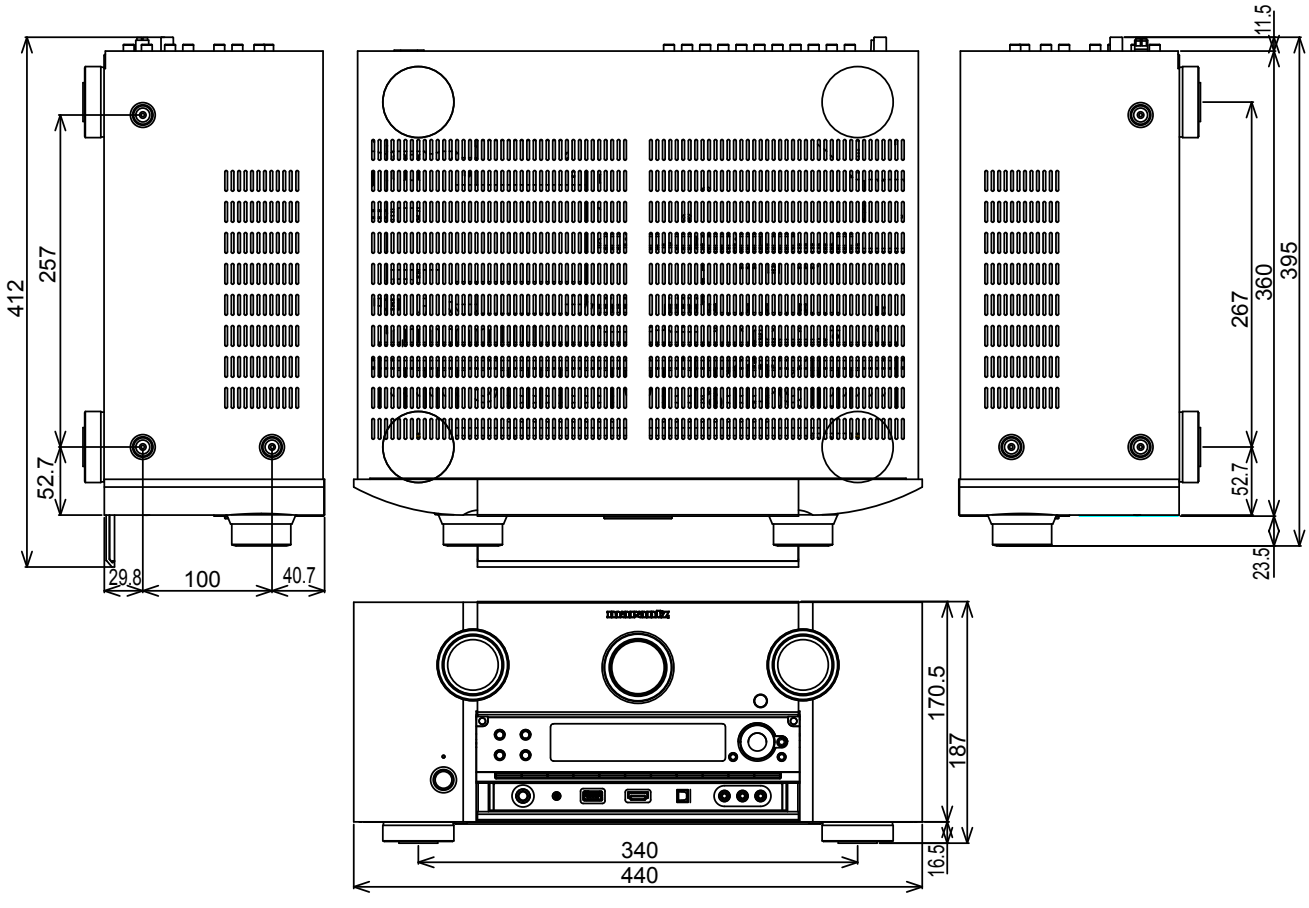

CAUTION IN SERVICING

Firmware update

- When you replace the DIGITAL UNIT ASSY (8U-310051E), you need software updates.
  Refer to "VERSION UPGRADE PROCEDURE OF FIRMWARE (26 - 36 page) .

  Please update the following procedure.
  1. First, Please update by DFW (33 - 36 page).
  2. Next, Please update the latest firmware by DPMS (26 - 32 page).

Initializing AV Pre Tuner

AV Pre Tuner initialization should be performed when the µcom, peripheral parts of µcom, and Digital P.W.B. are replaced.

1. Turn off the power using ON/STANDBY button.
2. Press ON/STANDBY button while simultaneously pressing SURROUND MODE and AUTO buttons.
3. Check that the entire display is flashing with an interval of about 1 second, and release your fingers from the 2 buttons and the microprocessor will be initialized.

Note: •If step 3 does not work, start over from step 1.
•All user settings will be lost and this factory setting will be recovered when this initialization mode. So make sure to memorize your setting for restoring after the initialization.

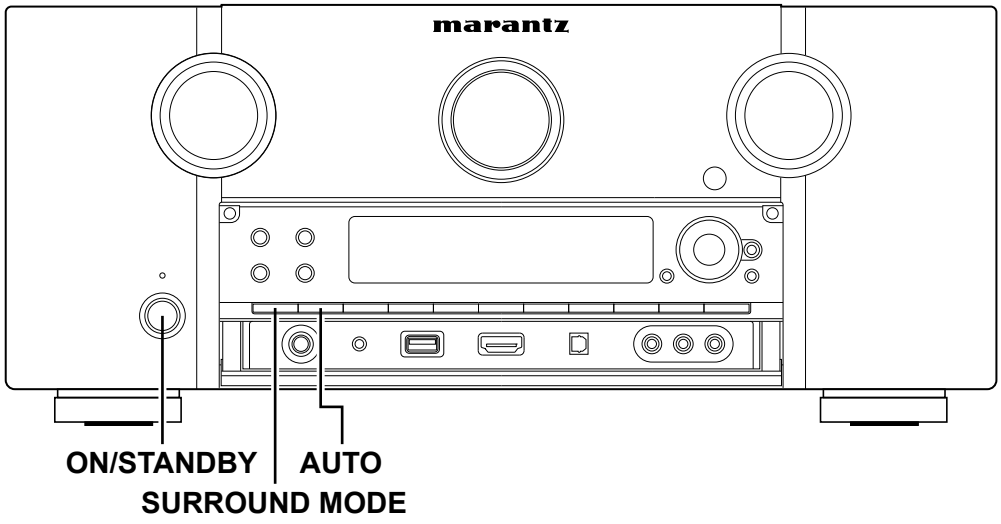

Service Jigs

When you repair the printing board, you can use the following JIG (Extension cable kit).
Please order to marantz Official Service Distributor in your region if necessary.

8U-110084S : EXTENSION UNIT KIT : 1 Set
(Refer to "JIG FOR SERVICING".)

DISASSEMBLY

- Disassemble in order of the arrow of the figure of following flow.
- In the case of the re-assembling, assemble it in order of the reverse of the following flow.
- In the case of the re-assembling, observe "attention of assembling" it.
- If wire bundles are untied or moved to perform adjustment or parts replacement etc., be sure to rearrange them neatly as they were originally bundled or placed afterward.
  Otherwise, incorrect arrangement can be a cause of noise generation.

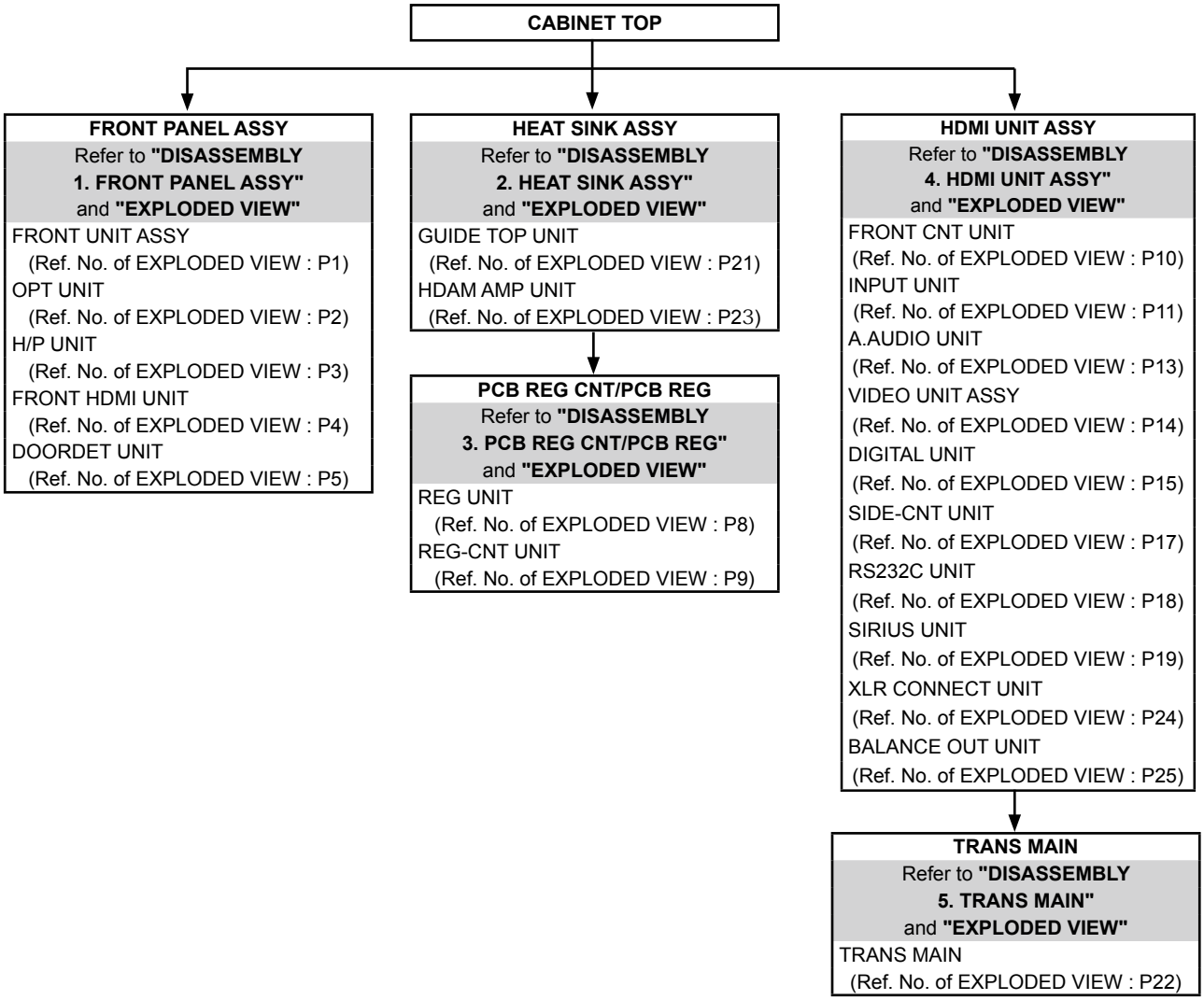

About the photos used for descriptions in the DISASSEMBLY" section.

- The direction from which the photographs used herein were photographed is indicated at "Direction of photograph: ***" at the left of the respective photographs.
- Refer to the table below for a description of the direction in which the photos were taken.
- Photographs for which no direction is indicated were taken from above the product.

The viewpoint of each photograph (Photografy direction)

[View from above]

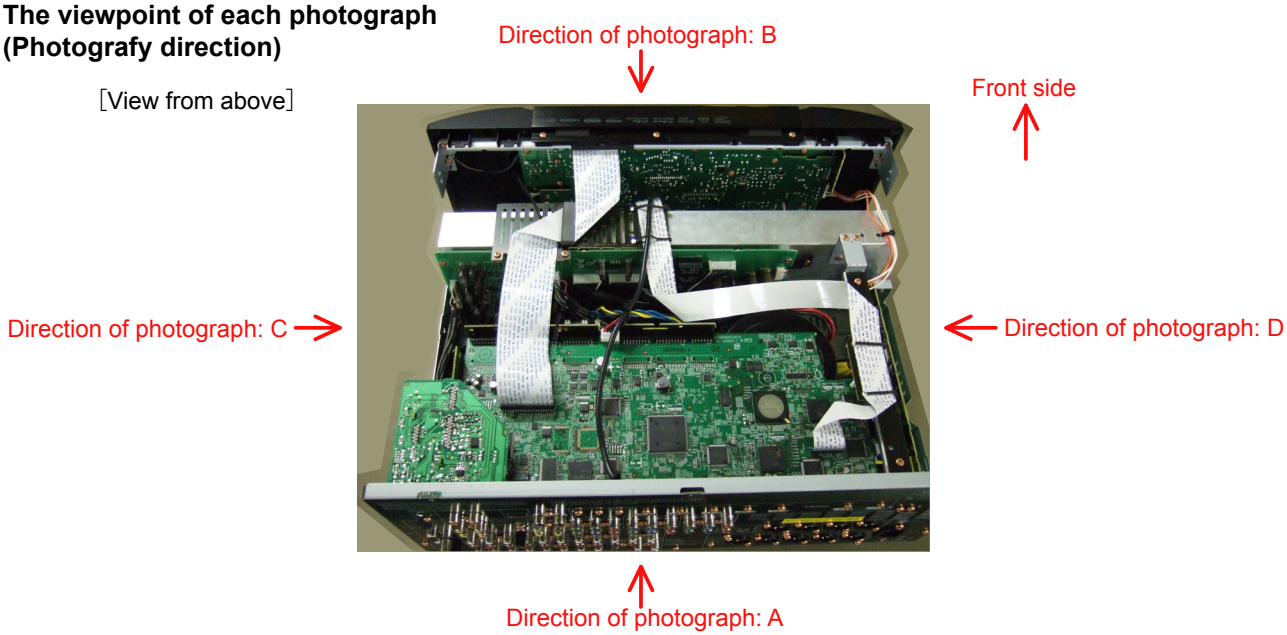

1.FRONT PANEL ASSY

Proceeding : CABINET TOP → FRONT PANEL ASSY

(1) Remove the screws.

(2) Cut the wire clamp band, then disconnect the connector wires and FFC cable.

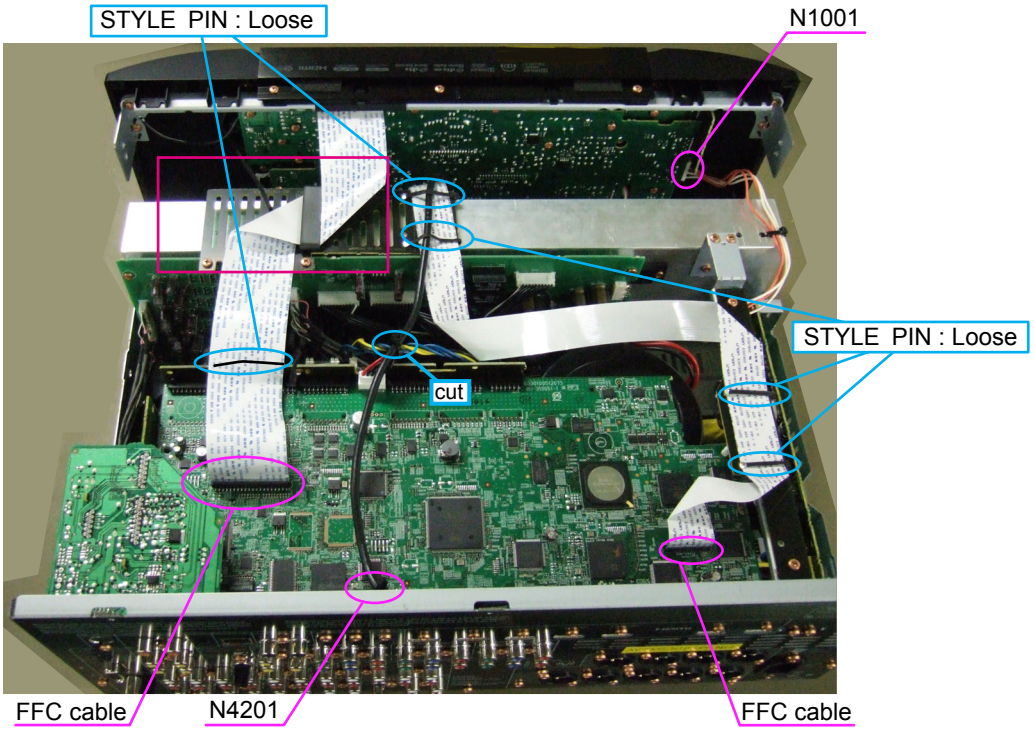

※Do not remove the FERRITE CORE when you disconnect the FFC cable.

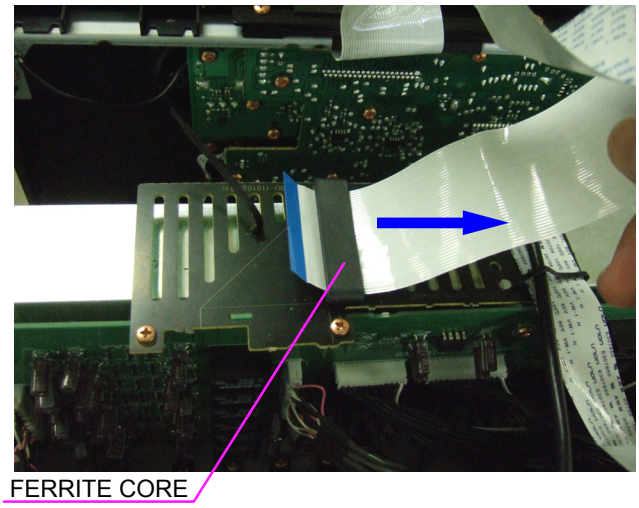

(3) Remove the screws.

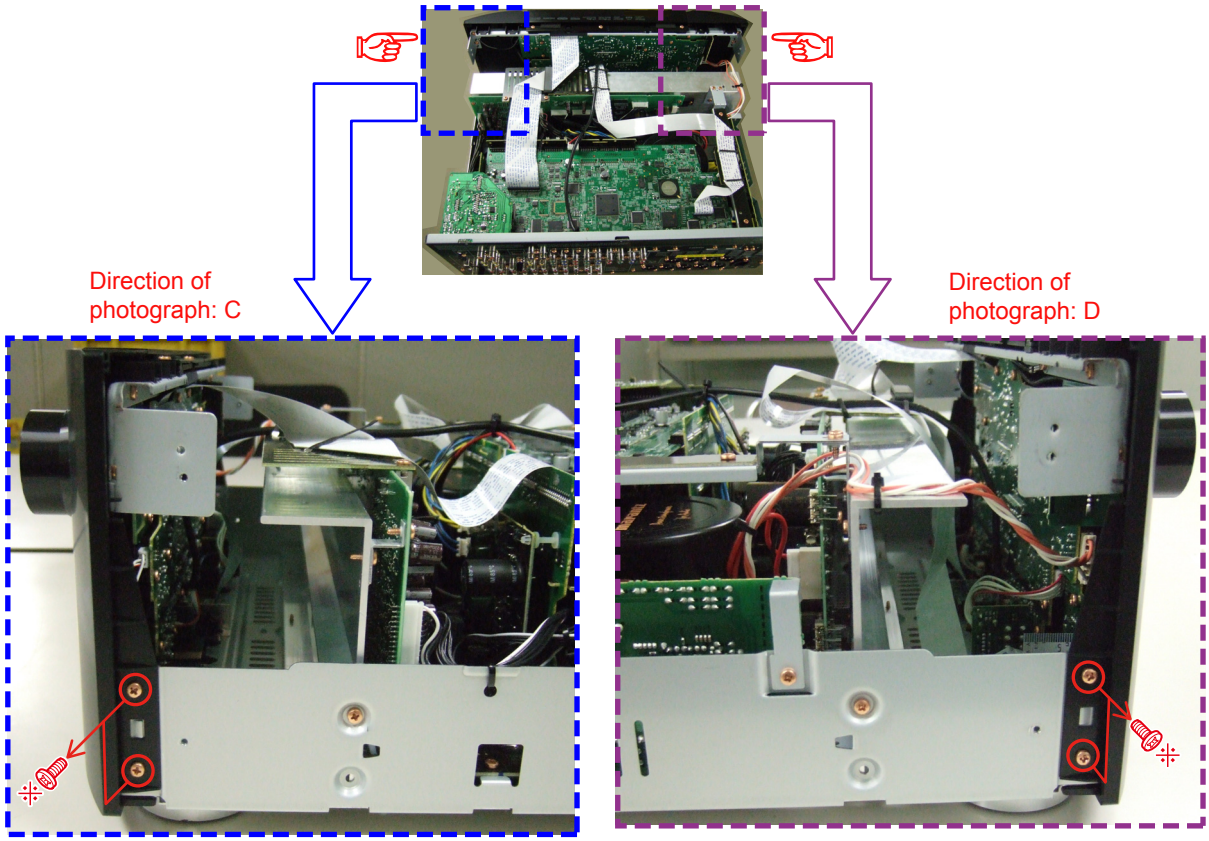

Please refer to "EXPLODED VIEW" for the disassembly method of each P.W.B included in FRONT PANEL ASSY.

2. HEAT SINK ASSY

Proceeding : CABINET TOP → HEAT SINK ASSY

(1) Remove the screws.

View from bottom

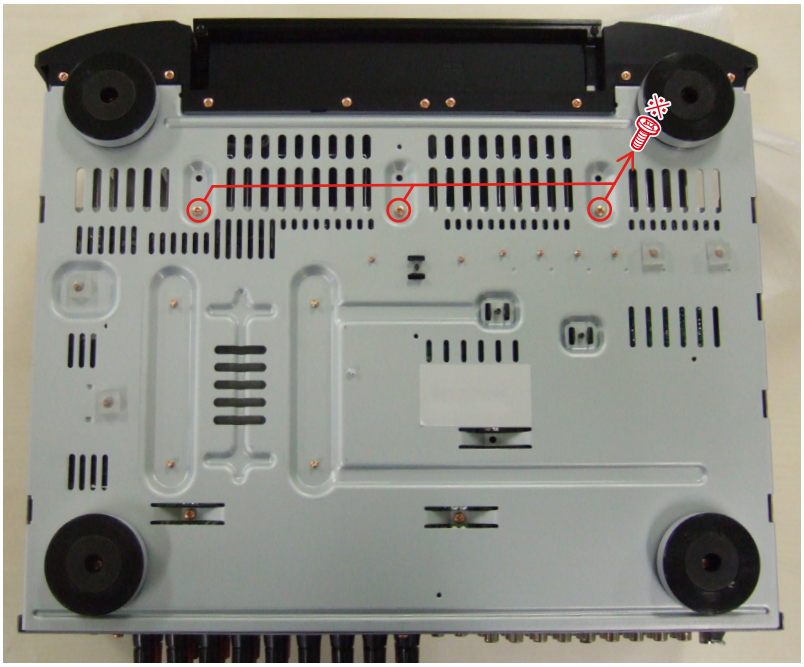

(2) Cut wire clamp band, then remove the screws. Disconnect the connector wires.

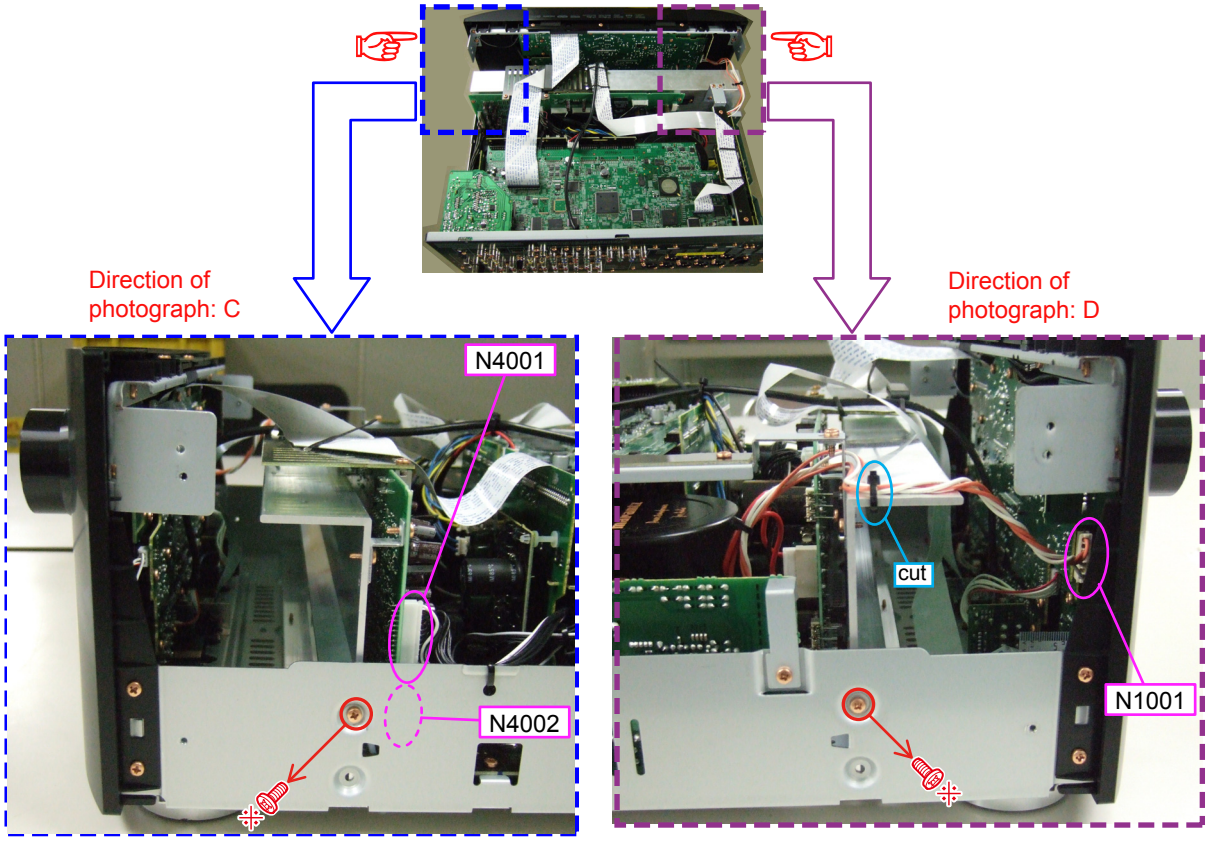

(3) Remove the screws.

Direction of photograph: A

(4) Cut the wire clamp bands, then disconnect the connector wires and FFC cable. Remove the screws, SUPPORT PWB. and the HDMI BRACKET.

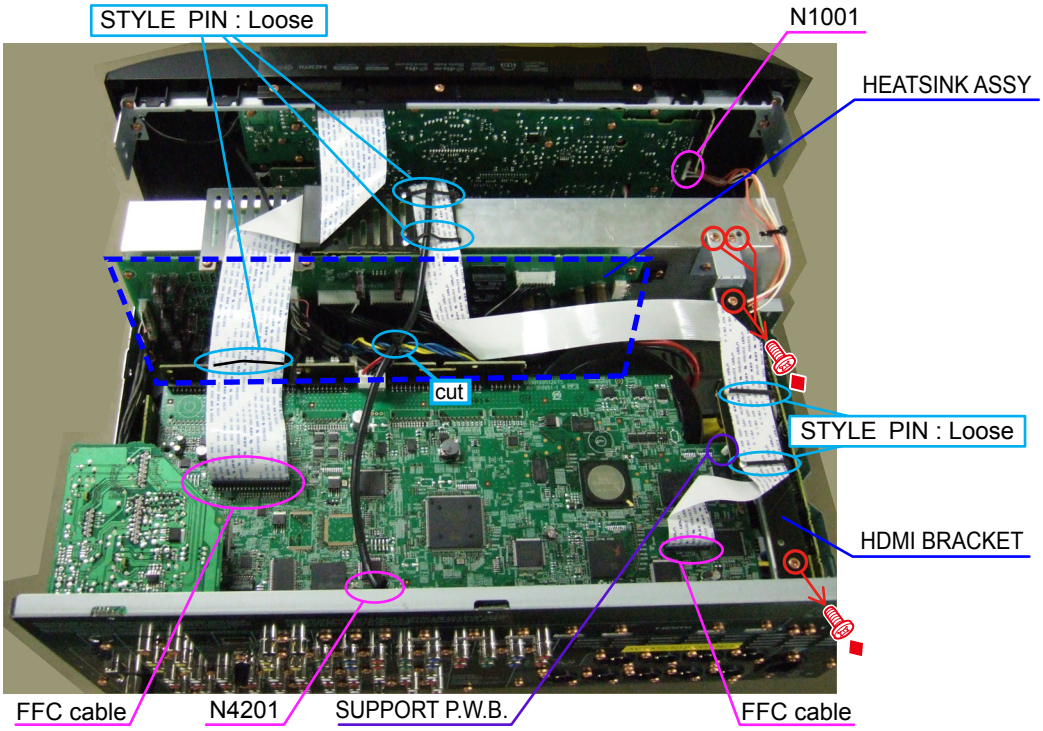

※ Do not remove the FERRITE CORE when you disconnect the FFC cable.

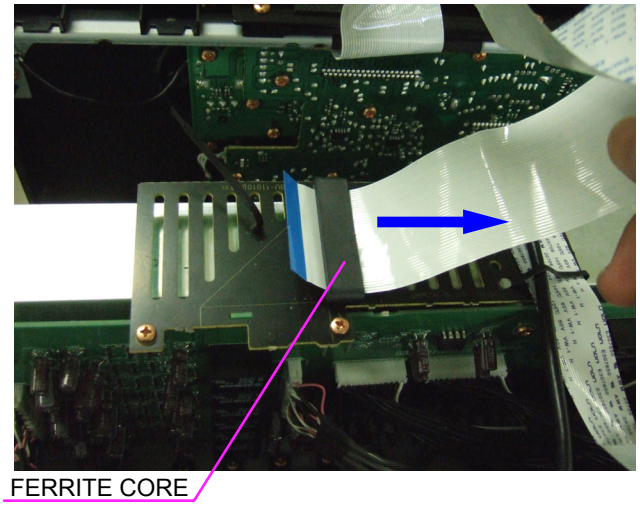

(5) Disconnect the connector wires.

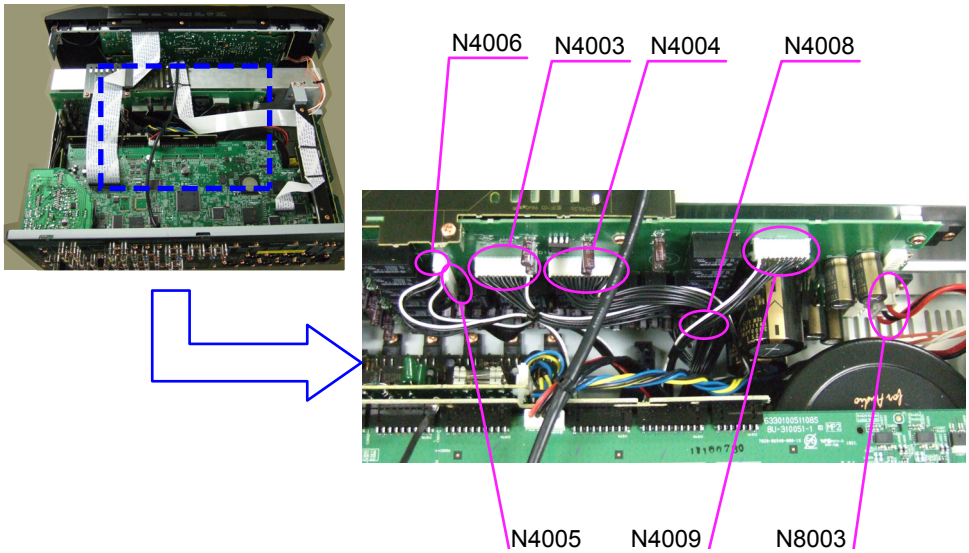

Please refer to "EXPLODED VIEW" for the disassembly method of each P.W.B included in HEAT SINK ASSY.

3. PCB REG CNT/PCB REG

Proceeding : CABINET TOP → HEAT SINK ASSY → PCB REG CNT/PCB REG

(1) Remove the screws.

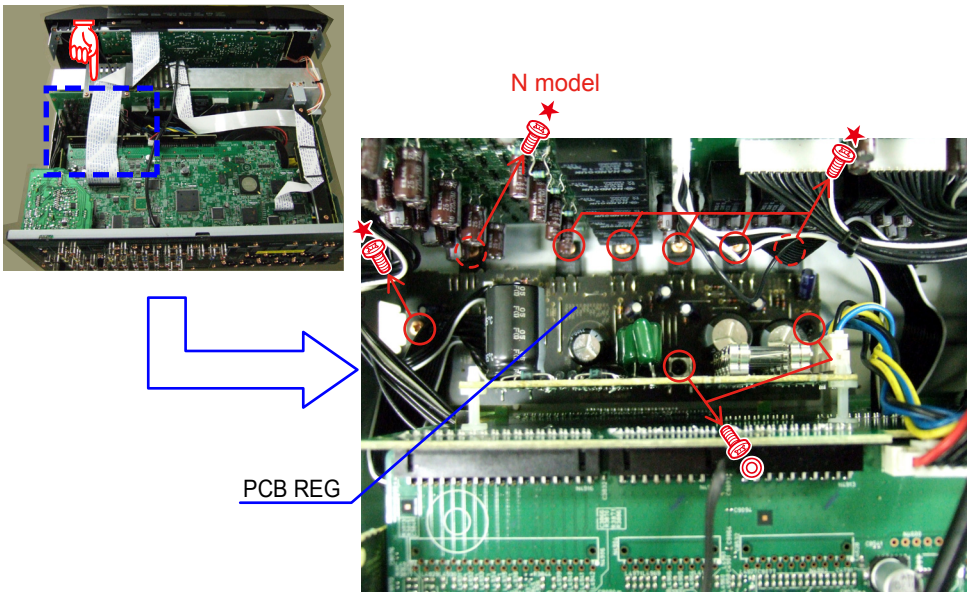

(2) Disconnect the connector wires and connector board.

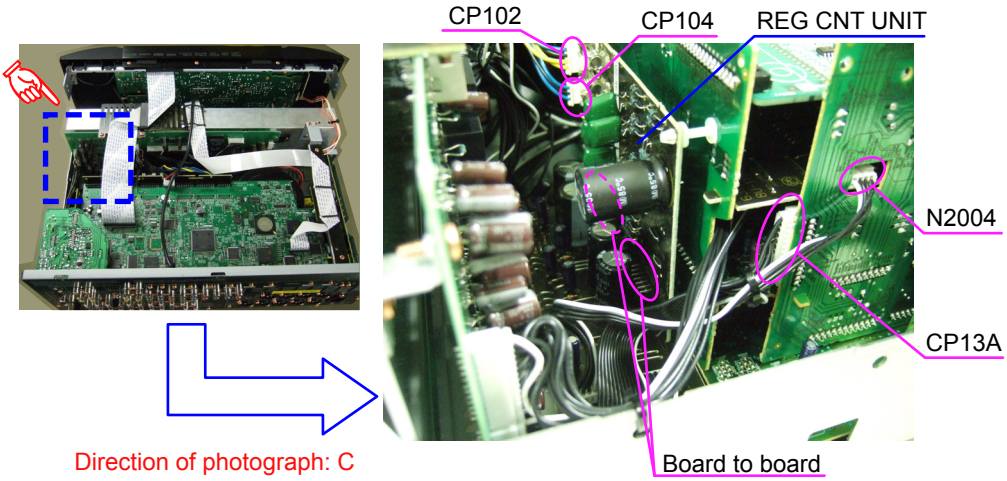

4. HDMI UNIT ASSY

Proceeding : CABINET TOP → HDMI UNIT ASSY

(1) Remove the screws, then remove the BACK PANEL and the HDMI BRACKET.

(2) Cut wire clamp band, then disconnect the connector wires and the FFC cables. Remove the screws and the SUPPORT PWB.
Remove the PCB SIRIUS and the PCB RS232 from the PCB SIDE CNT(Board to board).

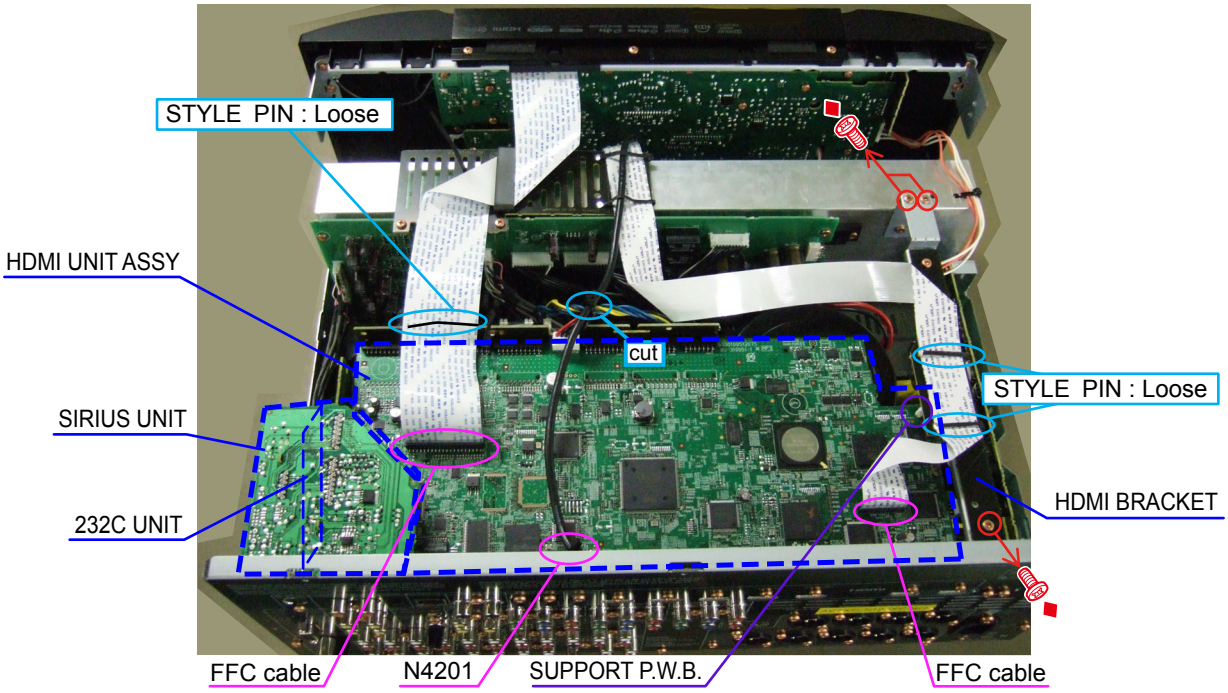

(3) Cut the wire clamp band, then disconnect the connector wires. Remove the screw.

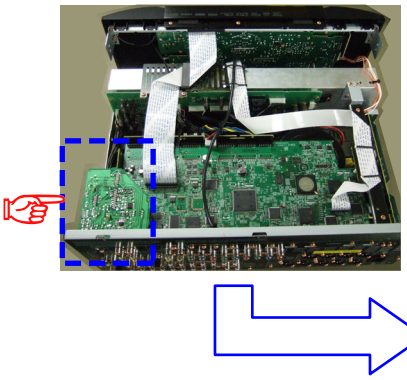

Direction of photograph: C

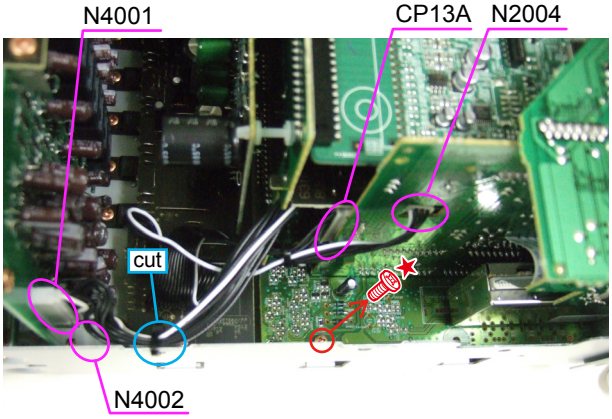

(4) Disconnect the connector.

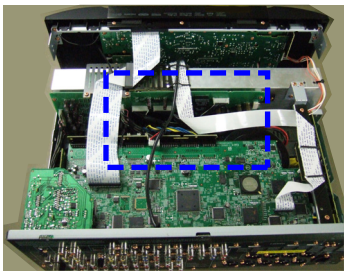

Direction of photograph: D

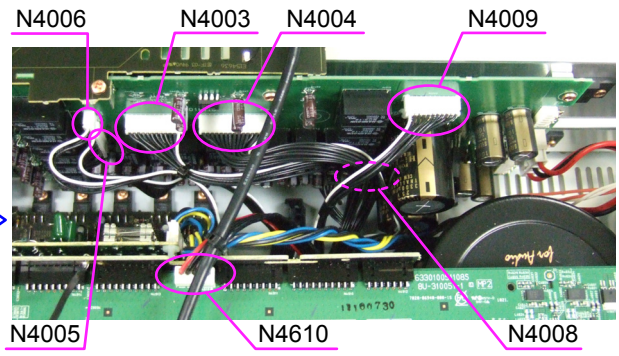

(5) Disconnect the connector wire, then remove the screws and the P.W.B HOLDER..

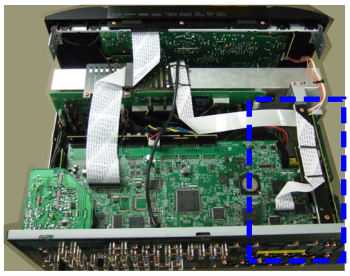

Direction of photograph: D

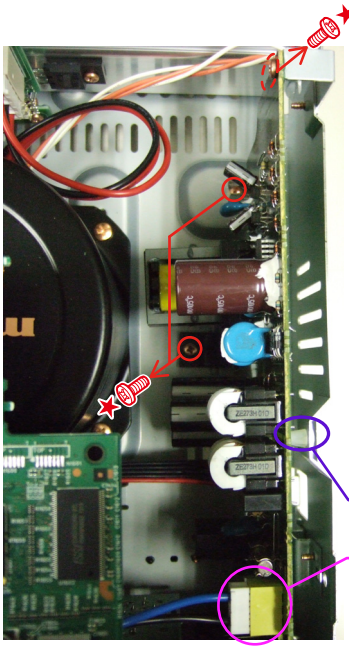

(6) Remove the screws and P.W.B HOLDER. Remove the HDMI UNIT ASSY from the main unit.

View from bottom

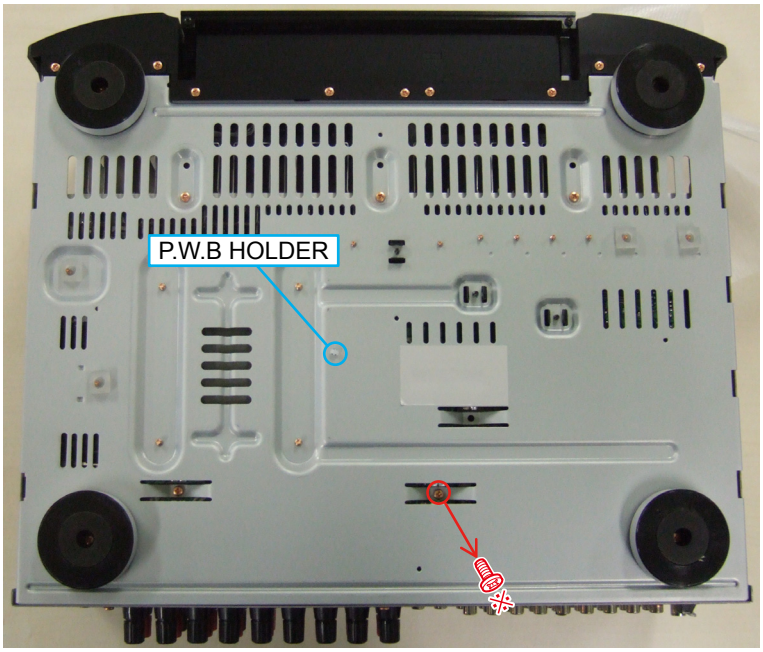

Please refer to "EXPLODED VIEW" for the disassembly method of each P.W.B included in HDMI UNIT ASSY.

5. TRANS MAIN

Proceeding : CABINET TOP → HDMI UNIT ASSY → TRANS MAIN

Please refer to "EXPLODED VIEW" for the disassembly method of each P.W.B included in TRANS MAIN.

SPECIAL MODE

Special mode setting button

※ Press the ON/STANDBY button to turn on while pressing both buttons A and B at the same time.

Mode	Button A	Button B	Contents
µcom/DSP Version display mode	STATUS	RETURN	Firmware versions such as Main, Sub, DSP are displayed in the FL manager. Errors are displayed when they occur. (Refer to 17 page.)
IInitialization mode (Remove settings for Installer Setup.)	SURROUND MODE	AUTO	Backup data initialization is carried out. (Remove settings for Installer Setup)
Initialization mode (Includes settings for Installer Setup)	CURSOR UP	PURE DIRECT	Backup data initialization is carried out. (Includes settings for Installer Setup)
Mode for switching tuner frequency step	SURROUND MODE	PURE DIRECT	---N model only--- Change tuner frequency step to FM:200kHz/AM:10kHzSTEP
Mode for preventing remote control acceptance	STATUS	ENTER	Operations using remote control are rejected. (Mode cancellation: Turn off power and execute the same button operations as when performing setup.)
Panel lock mode	AUTO	DISPLAY	Operations using main unit panel buttons or master volume are rejected.
Panel lock mode (Remove Master volume)	DISPLAY	PURE DIRECT	Operations using main unit panel buttons are rejected.
Cancellation of panel lock mode	CURSOR DOWN	DISPLAY	Panel lock mode is cancelled.
Installer Setup mode	MENU	CURSOR LEFT	Access Remote Maintenance mode via the internet. Installer Setup is displayed on GUI/Option Menu.

NOTE:

If " S " is displayed on the fluorescent display, the unit is set to the special developer's mode and RS-232C communications are not possible.
Press and hold in the "STATUS" and " ▽ " buttons for over 3 seconds with the power turned on to turn the " S " display off. RS-232C communications are now enabled.

※ When power is turned on, pressing both buttons A and B at the same time for 3 seconds or more.

Mode	Button A	Button B	Contents
DUAL BACKUP MEMORY (Backup)	SLEEP	ENTER	Backup of DUAL BACKUP MEMORY is performed. (Refer to 20 page.)
DUAL BACKUP MEMORY (Recovery)	SLEEP	MENU	Recovery of DUAL BACKUP MEMORY is performed. (Refer to 20 page.)
DUAL BACKUP MEMORY (Backup Clear)	SLEEP	AUTO	Backup of DUAL BACKUP MEMORY is cleared. (Refer to 20 page.)

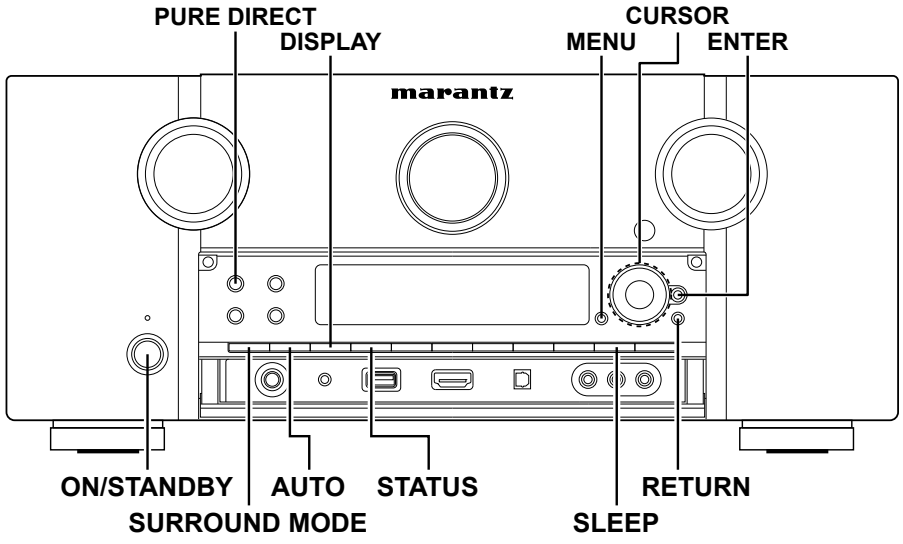

1. µcom/DSP Version display mode

1.1. Operation specifications

µcom/DSP version display mode:

When started up, the version information is displayed.

Starting up:

With the "RETURN" and "STATUS" buttons pressed, press the "ON/STANDBY" button to turn the power on.
Now, press the "STATUS" button to the display the 2nd item information on the FL Display.

1.2. Display Order

Error information(Refer to 1.3. Error display) → ①Model destination information → ②Firmware Package Version → ③Main µ-com/ROM version → ④Main 1st Boot Loader → ⑤Sub µ-com/Sub FBL → ⑥DSP version → ⑦Audio PLD → ⑧OSD FPGA Config → ⑨OSD Program → ⑩OSD font data → ⑪Ethernet(DM860) 1st Boot Loader, Hardware ID → ⑫Ethernet(DM860) 2nd Boot Loader, Rhapsody Flag → ⑬Ethernet(DM860) IMAGE → ⑭Ethernet(DM860)MAC ADDRESS information → ⑮HD RADIO SDK/HD RADIO BBP(U model only) → ⑯MultEQ Pro APP(Displayed when Audyssey Pro is complete) → ⑰MultEQ Pro ICL(Displayed when Audyssey Pro is complete

①Model destination information :

Upper	A	V	7	0	0	5		*								
Lower	S	/	N	.			*	*	*	*	*	*	*	*	*	*

②Firmware Package Version :

Upper		F	i	r	m	.		P	a	c	k	a	g	e		
Lower								V	e	r	.	:	*	*	*	*

③Main µ-com & ROM version :

Upper		M	a	i	n						:	*	*	.	*	*
Lower		M	a	i	n		R	O	M		:	*	*	.	*	*

④Main 1st Boot Loader :

Upper		M	a	i	n		F	B	L		:	*	*	.	*	*
Lower																

⑤Sub µ-com & Sub FBL :

Upper		S	u	b							:	*	*	.	*	*
Lower		S	u	b		F	B	L			:	*	*	.	*	*

⑥DSP ROM :

Upper		D	S	P							:	*	*	.	*	*
Lower																

⑦Audio PLD :

Upper	A	u	d	i	o		P	L	D		:	*	*	.	*	*
Lower																

⑧OSD FPGA Config :

Upper	O	S	D		C	o	n	f	i	g	:					
Lower	*	*	*	*	*	*	*	*	*	*	*	*				

⑨OSD Program :

Upper	O	S	D		P	R	G	:								
Lower	*	*	*	*	*	*	*	*	*	*	*	*				

⑩OSD font data :

Upper	O	S	D		D	A	T	:								
Lower	*	*	*	*	*	*	*	*	*	*	*	*				

⑪Ethernet(DM860) 1st Boot Loader, Hardware ID :

Upper	*	E	t	h	e	r	n	e	t		F	B	L			
Lower	*	*	*	*	*	*	*	*	-	A	A					

⑫Ethernet(DM860) 2nd Boot Loader, Rhapsody Flag :

Upper	*	E	t	h	e	r	n	e	t		S	B	L			
Lower	*	*	*	*	*	*	*	*	*	*	*	*	*	-	B	B

⑬Ethernet(DM860) IMAGE :

Upper	*	E	t	h	e	r	n	e	t		I	M	G			
Lower	*	*	*	*	*	*	*	*	*	*	*	*	*			

⑭Ethernet(DM860) MAC ADDRESS information :

Upper	*	E	t	h	e	r	n	e	t		M	A	C			
Lower		*	*	*	*	*	*	-	*	*	*	*	*	*		

⑮HD RADIO SDK/HD RADIO BBP (U model only) :

Upper	*	H	D	S	D	K	:					*	*	.	*	*
Lower	*	H	D	B	B	P	:	C	0	0	0	2	.	0	0	0

⑯MultEQ Pro APP(Displayed when Audyssey Pro is complete) :

Upper	*	M	u	l	t	E	Q		P	r	o		A	P	P	
Lower	*	*	.	*	*	.	*	*	.	*	*	*	*			

⑰MultEQ Pro ICL(Displayed when Audyssey Pro is complete) :

Upper	*	M	u	l	t	E	Q		P	r	o		I	C	L	
Lower	*	*	.	*	*	.	*	*	.	*	*	*	*			

1.3. Error display

See the following table for each "Error information" display and its contents (status).
Display order is ①,②,③,④,⑤.

Condition	State	State
① Sub-µcom NG	No response from Sub-µcom	SUB ERROR 01
② DIR NG	No response from DIR	DIR ERROR 01
③ DSP NG	When DSP boot, executing DSP reset makes no change to DSP1 FLAG0 port "H".	DSP ERROR 01
	No change to DSP FLAG0 port "H" before issuing DSP command.	DSP ERROR 02
	When DSP data read, executing WRITE="L" makes no change to ACK="H".	DSP ERROR 03
	When DSP data read, executing REQ="L" makes no change to ACK="L".	DSP ERROR 04
	When DSP data write, executing WRITE="H" makes no change to ACK="H".	DSP ERROR 05
	When DSP data write, executing REQ="L" makes no change to ACK="L".	DSP ERROR 06
	When DSP special code boot, executing DSP reset makes no change to DSP FLAG0 port "H".	DSP ERROR 11
	No change to DSP FLAG0 port "H" before issuing DSP special read command.	DSP ERROR 12
	No change to DSP FLAG0 port "H" before DSP version read.	DSP ERROR 13
④ EEPROM NG	Error appeared in EEPROM checksum.(*** is a block address number.)	E2PROM ERR***
⑤ Both SUB/DSP /EEPROM OK		(No error display, version display only)

2. DUAL BACKUP MEMORY

This product has a Dual Backup Memory function. The conventional Backup functions to memorize, in the EEPROM (U5302) in the circuit, a current setting of the moment the main power is turned off so that it can be restored when it is turned ON again. Meanwhile, the DUAL BACKUP MEMORY is capable of memorizing any arbitrary setting that is configured while the product is in operation so as to restore it at any time. When servicing units returned from end-users for repairs, use this function to back up the current setting (e.g. Tuner Preset). This will enable the units to be returned to the users after repairs, with the setting unchanged.

NOTE : If end-users use this function, the data will be overwritten.
The contents of the memory do not disappear even if you initialize this unit.
If you want to erase, please refer to 2.2. SERVICE PRECAUTIONS.

2.1. HOW TO OPERATE

-Backup-

(1) Configure a setting you would like to save in the MEMORY and hold down the "SLEEP" and "ENTER" buttons on the Front Panel at the same time for 3 seconds or more.

(2) The FL Display indicates "MEMORY SAVING" while the Backup is being performed.

FLD	M	E	M	O	R	Y		S	A	V	I	N	G			

(3) The FL Display indicates "COMPLETE" when the Backup is completed.

FLD	C	O	M	P	L	E	T	E								

-Recovery-

(1) Hold down the "SLEEP" and "MENU" buttons at the same time for 3 seconds or more.

(2) The FL Display indicates "MEMORY LOAD" while the Recovery is being performed.

FLD	M	E	M	O	R	Y		L	O	A	D					

(3) After the FL Display indicates "COMPLETE", the product goes into Standby mode. When the power is restored, the Recovery is completed.

FLD	C	O	M	P	L	E	T	E								

The FL Display indicates "NO BACKUP" if the DUAL BACKUP MEMORY has not been activated with no data to be recovered saved in the Memory.

FLD	N	O		B	A	C	K	U	P							

2.2. SERVICE PRECAUTIONS

When the Flash Rom (U5302) on the HDMI PWB is replaced make sure, in order to maintain consistency with the Backup Memory, to clear the DUAL BACKUP MEMORY in thefollowing way :

-How to clear the Backup Memory-

(1) Hold down the "SLEEP" and "AUTO" buttons at the same time for 3 seconds or more.

(2) The FL Display indicates "BACKUP CLEAR" while the memory is being cleared.

FLD	B	A	C	K	U	P		C	L	E	A	R				

(3) After the FL Display indicates "COMPLETE", the operation is completed.

FLD	C	O	M	P	L	E	T	E								

JIG FOR SERVICING

When you repair the printing board, you can use the following JIG (Extension cable kit).
Please order to marantz Official Service. Distributor in your region if necessary.

Note: When the connection which is wrong in the JIG (EXTENSION UNIT KIT) is done it becomes cause of damage.

8U-110084S : EXTENSION UNIT KIT

• Connection of PCB HDMI JIG

-Preparation-

8U-110084S : EXTENSION UNIT KIT	: 1 Set
Insulation sheet (Do not supply it)	: 3 sheet
Ground lead (Do not supply it)	: 3 pcs

-Procedures-

(1) Remove the screws.

(2) Disconnect the connector board.

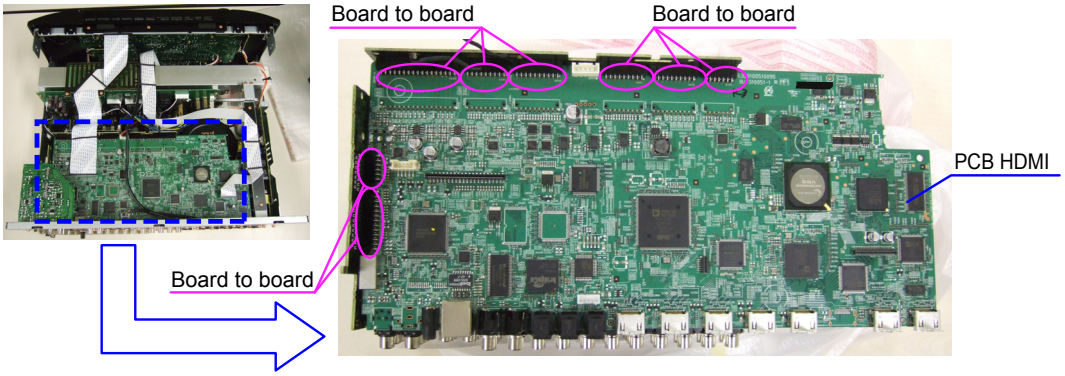

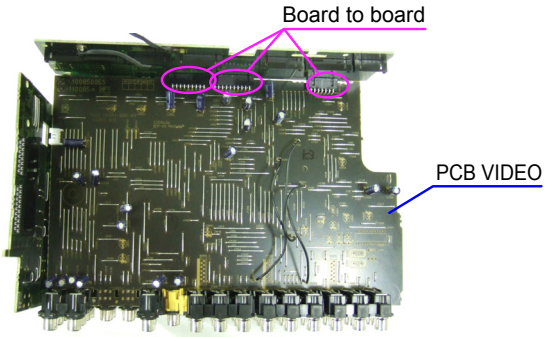

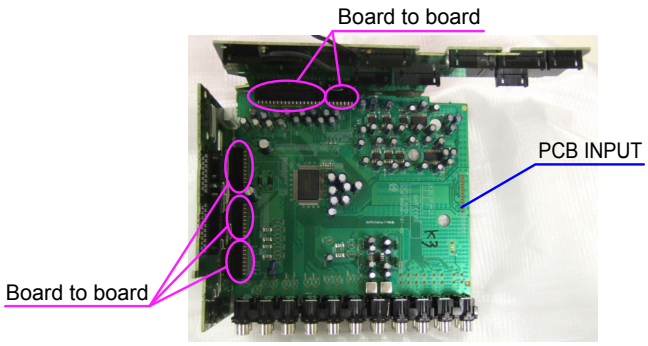

(3) PCB HDMI is detached from the chassis, and it puts it into the state turned inside out.
Please pave an insulation sheet that is larger than PCB HDMI under PCB.
※ Connect the ground point of PCB to the chassis with a ground lead or the like.

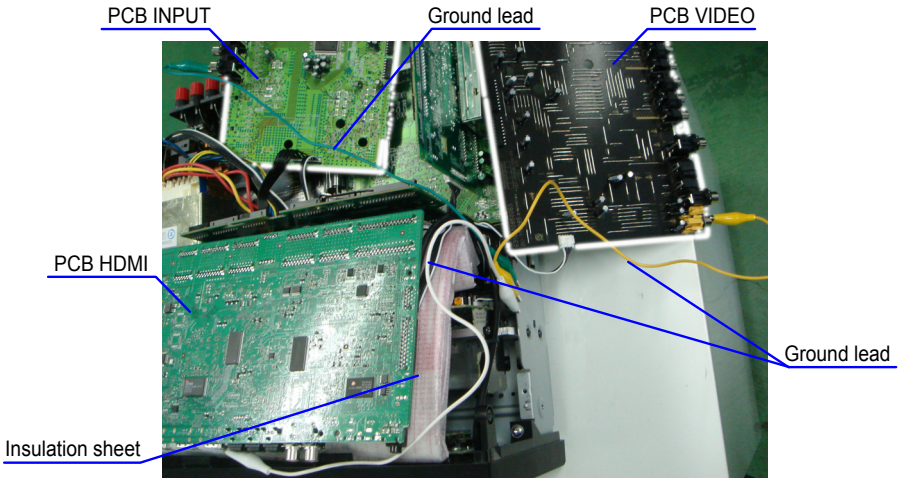

(4) Connect the four extension jig cables.

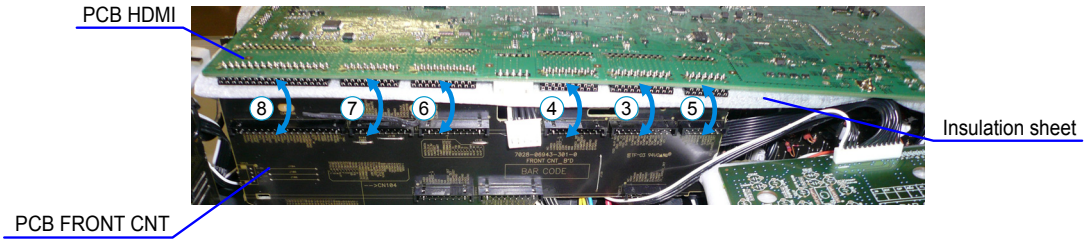

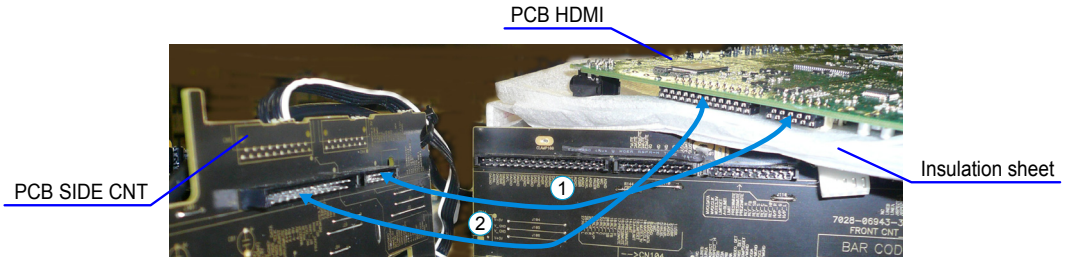

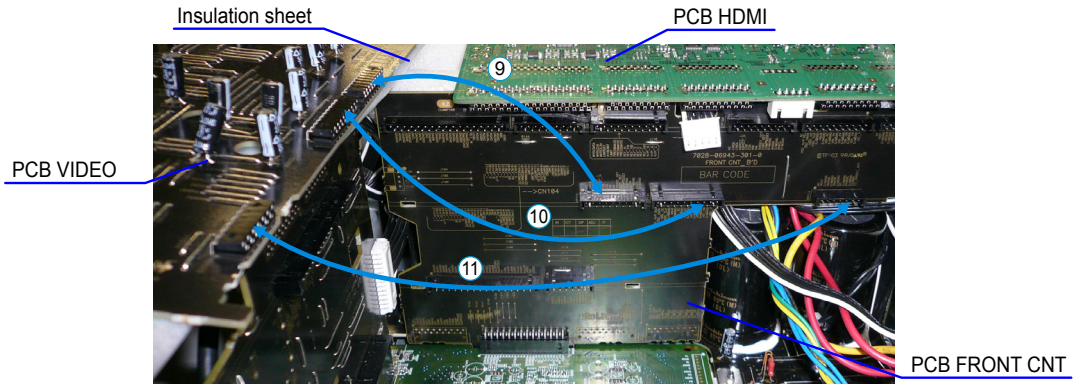

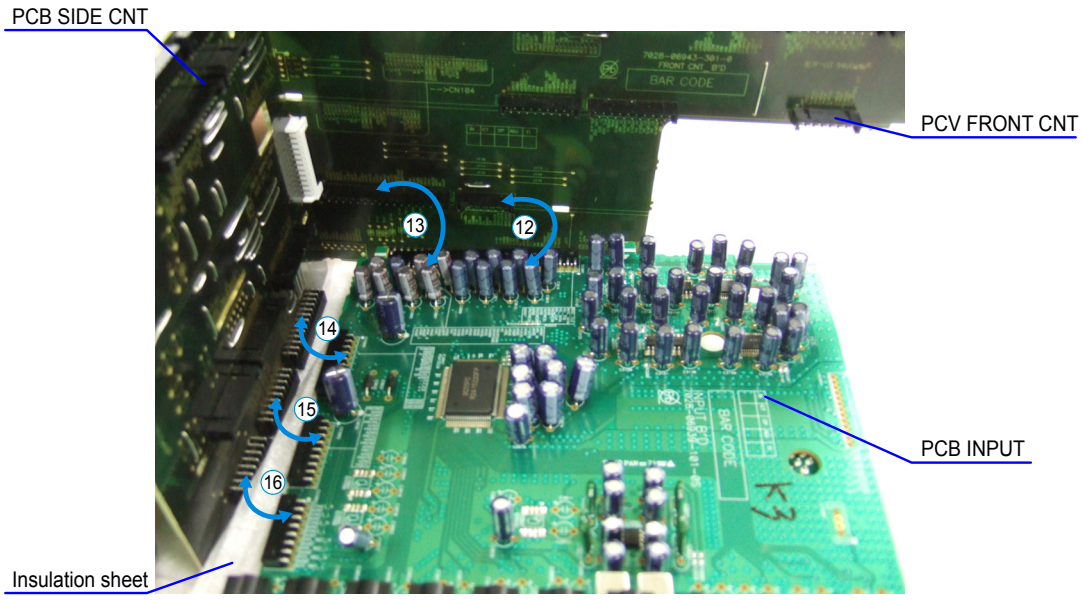

Connection table of Board to Board

No.	Pin	Ref. No.	PCB		Ref. No.	PCB
①	11 pin	CP3	SIDE CNT	⟷	N4908	HDMI
②	25 pin	CP4	SIDE CNT	⟷	N4907	HDMI
③	19 pin	CP105	FRONT CNT	⟷	N4910	HDMI
④	17 pin	CP106	FRONT CNT	⟷	N4911	HDMI
⑤	13 pin	CP107	FRONT CNT	⟷	N4912	HDMI
⑥	19 pin	CP108	FRONT CNT	⟷	N4913	HDMI
⑦	17 pin	CP109	FRONT CNT	⟷	N4914	HDMI
⑧	33 pin	CP110	FRONT CNT	⟷	N4916	HDMI
⑨	19 pin	CP111	FRONT CNT	⟷	N2001	VIDEO
⑩	17 pin	CP112	FRONT CNT	⟷	N2002	VIDEO
⑪	13 pin	CP113	FRONT CNT	⟷	N2003	VIDEO
⑫	13 pin	CP114	FRONT CNT	⟷	CX3001	INPUT
⑬	33 pin	CP115	FRONT CNT	⟷	CN3000	INPUT
⑭	19 pin	CP6	SIDE CNT	⟷	CX3000	INPUT
⑮	17 pin	CP7	SIDE CNT	⟷	CX3002	INPUT
⑯	15 pin	CP8	SIDE CNT	⟷	CX3003	INPUT

ABOUT REPLACE THE MICROPROCESSOR WITH A NEW ONE

When replaced of the U-PRO (Microprocessor) or the Flash ROM, confirm contents of the following.

PWB Name	Ref. No.	Description	After replaced	Remark
HDMI	U5301	R5F64169DFD	**B**	SOFTWARE: Main
HDMI	U5101	EN29LV160BB-70TIP	**B**	SOFTWARE: Main ROM
HDMI	U5500	R5F3650KNFB	**B**	SOFTWARE: Sub
HDMI	U3202	EN29LV160BB-70TIP	**B**	SOFTWARE: DSP ROM
HDMI	U3000	EPM240T100C5N	**B**	SOFTWARE: Audio PLD
HDMI	U1603	M25P40-VMN6PB	**B**	SOFTWARE: Video Config ROM

After replaced

A : Mask ROM (With software). No need write-in of software to the microprocessor.

B : Flash ROM (With software). Usually, no need write-in of software. But, when the software was updated, you should be write-in of the new software to the microprocessor or flash ROM. Please check the software version.

C : Empty Flash ROM (Without software). You should be write-in of the software to the microprocessor or flash ROM. Refer to "Update procedure" or "writing procedure", when you should be write-in the software.

VERSION UPGRADE PROCEDURE OF FIRMWARE

1. How to update by DPMS

You can update by downloading the latest firmware from the Internet.

1.1. Connecting to the Network

(1) System Requirement

- Internet Connection by Broadband Circuit
- Modem
- Router
- Ethernet cable (CAT-5 or greater recommended)

(2) Setting

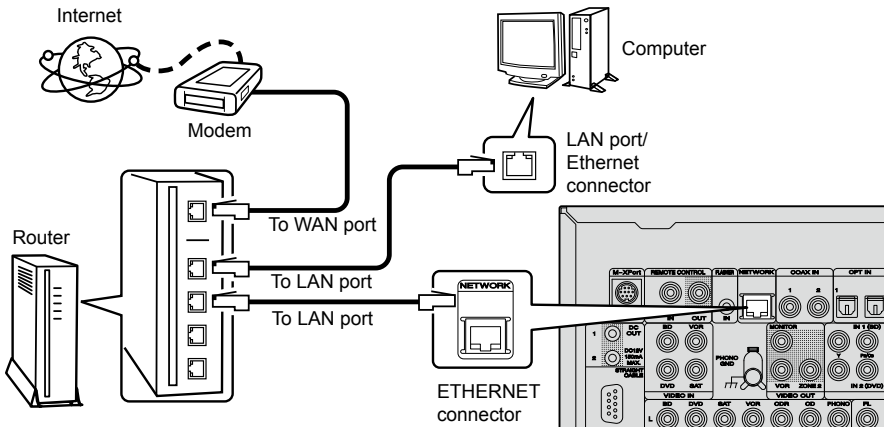

1.2. Check for Update and Update

Check if the latest firmware exists. You can also check approximately how long it will take to complete an update.

(1) Press the MENU button on the remote control to display the GUI menu.

(2) Use the cursor buttons to select "Manual Setup" → "Option Setup" → "Firmware Update" → "Update Check".

(3) Press the ENTER buttom.

- The latest version of the firmware uploaded to the web is displayed.
- If the latest firmware version is on the web, proceed to (4).
- If the latest firmware is already installed, press the MENU button to close the menu.

(4) Use the cursor buttons to select "Update", then press the ENTER button.

- During update, the power indicator lights red and the GUI screen is shut down. And a rough remaining time is indicated on the display.
- When updating is complete the power indicator turns off and normal status is resumed.

(5) Press the MENU button to close the menu.

--- Cautions on Firmware Update ---

- In order to use these functions, you must have the correct system requirements and settings for a broadband Internet connection.
- Do not turn off the power until updating is completed.
  Even with a broadband connection to the Internet, approximately about 1 hour is required for the updating procedure to be completed.
  Once updating starts, normal operations on the SR7005 cannot be performed until updating is completed. Also, setting items of the GUI menu of SR7005 or setting items of the image adjustment may be initialized.
  Make a note of the settings before updating, and set them again after updating.

1.3. About the error code

See the chart below for error codes, details of faults, and coping strategies when firmware updates are performed through DPMS (D&M Product Management Server).

Error Code	Details of Error code	Display	Coping strategies
01	Log-in to DPMS has failed.		Reset and update again. Carry out the update in an environment that has little network load.
02	Line, etc., is busy when logging into DPMS.	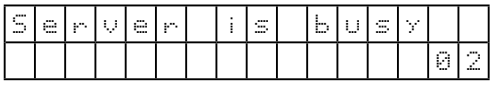	Carry out the update in an environment that has little network load.
03	Connection to DPMS failed.		Check the network connection. Carry out the update in an environment that has little network load.
04	Firmware file data was requested but error message was received.		Check the network connection. Carry out the update in an environment that has little network load.
05	Firmware file data was requested but it timed out.		Check the network connection. Carry out the update in an environment that has little network load.
06	Firmware file data was requested but error message was received.		Check the network connection. Carry out the update in an environment that has little network load.
07	All firmware file data was requested but it timed out.		Check the network connection. Carry out the update in an environment that has little network load.
08	Main CPU firmware file data was requested but error message was received.	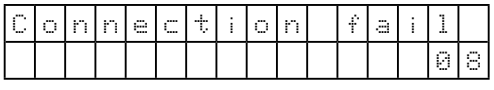	Check the network connection. Carry out the update in an environment that has little network load.
09	Main CPU firmware file data was requested but it timed out.		Check the network connection. Carry out the update in an environment that has little network load.
0A	Error (NG) message received when downloading Main CPU firmware.	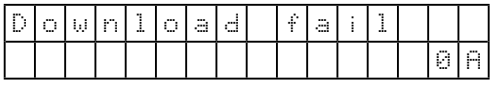	Check the network connection. Carry out the update in an environment that has little network load.
0B	Error (line congestion) message received when downloading Main CPU firmware.	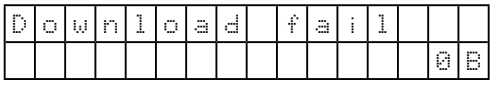	Check the network connection. Carry out the update in an environment that has little network load.
0C	Error (connection failure) message received when downloading Main CPU firmware.	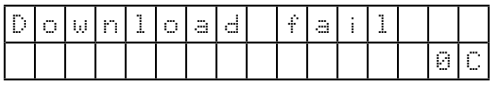	Check the network connection. Carry out the update in an environment that has little network load.

Error Code	Details of Error code	Display	Coping strategies
0D	Data acquisition failed (timed out) when downloading Main CPU firmware. Received Package Version is wrong.		Check the network connection. Carry out the update in an environment that has little network load.
10	Main CPU failed to receive firmware for rewriting sent from DM860 (when timed out).		Turn the power off then back on. Updating starts automatically.
11	Main CPU failed to receive firmware for rewriting sent from DM860 (when an error)		Turn the power off then back on. Updating starts automatically.
12	There was invalid data in the firmware for rewriting sent from DM860 to Main CPU (when a Check Sum error).	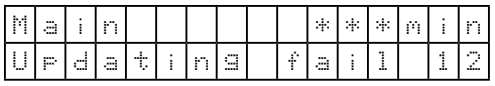	Turn the power off then back on. Updating starts automatically.
13	The deletion of block data failed before rewriting Main CPU.		Turn the power off then back on. Updating starts automatically.
14	The rewriting of block data failed when rewriting Main CPU.	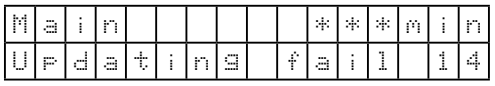	Turn the power off then back on. Updating starts automatically.
15	The data verification was invalid after rewriting Main CPU.		Turn the power off then back on. Updating starts automatically.
36	Log-in to DPMS has failed when rewriting firmware such as Sub CPU, DSP, FPGA, and PLD.	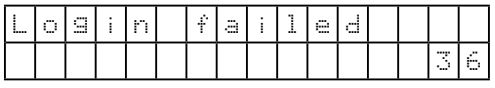	Carry out the update in an environment that has little network load.
37	Line, etc., is busy when logging into DPMS when rewriting firmware such as Sub CPU, DSP, FPGA, and PLD.	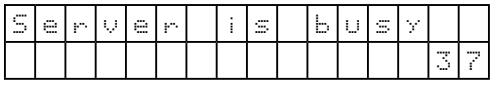	Carry out the update in an environment that has little network load.
38	Connection to DPMS failed when rewriting firmware such as Sub CPU, DSP, FPGA, and PLD.		Check the network connection. Carry out the update in an environment that has little network load.
39	Connection to DPMS timed out when rewriting firmware such as Sub CPU, DSP, FPGA, and PLD.	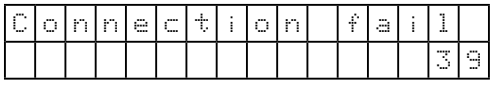	Check the network connection. Carry out the update in an environment that has little network load.
3A	Error (NG) message received when downloading firmware when rewriting Main CPU.	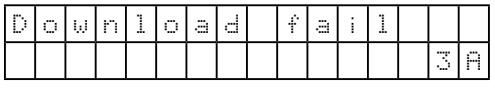	Turn the power off then back on. Updating starts automatically. Carry out the update in an environment that has little network load.
3B	Error (line congestion) message received when downloading firmware when rewriting Main CPU.	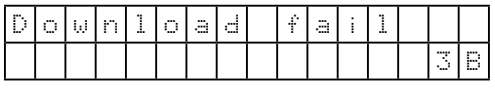	Turn the power off then back on. Updating starts automatically. Carry out the update in an environment that has little network load.
3C	Error (connection failure) message received when downloading firmware when rewriting Main CPU.	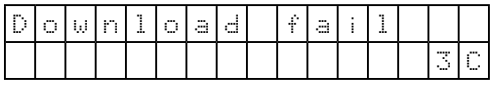	Turn the power off then back on. Updating starts automatically. Carry out the update in an environment that has little network load.
50	Log-in to DPMS has failed when rewriting firmware such as Sub CPU, DSP, FPGA, and PLD.		Carry out the update in an environment that has little network load.
51	Line, etc., is busy when logging into DPMS when rewriting firmware such as Sub CPU, DSP, FPGA, and PLD.	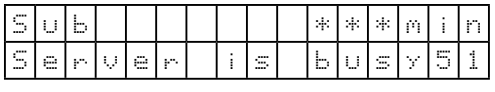	Carry out the update in an environment that has little network load.

Error Code	Details of Error code	Display	Coping strategies
52	Connection to DPMS failed when rewriting firmware such as Sub CPU, DSP, FPGA, and PLD.	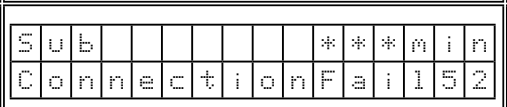	Check the network connection. Carry out the update in an environment that has little network load.
54	Error message received regarding firmware data after logging in to DPMS when rewriting firmware such as Sub CPU, DSP, FPGA, and PLD.	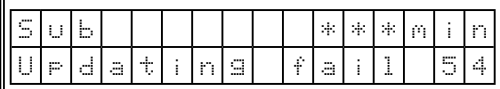	Turn the power off then back on. Updating starts automatically. Carry out the update in an environment that has little network load.
55	When rewriting firmware such as Sub CPU, DSP, FPGA, and PLD, request was made for firmware data after logging in to DPMS, but it timed out.	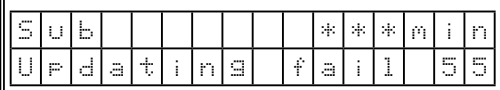	Turn the power off then back on. Updating starts automatically. Carry out the update in an environment that has little network load.
56	Failure to download firmware after logging in to DPMS when rewriting firmware such as Sub CPU, DSP, FPGA, and PLD.	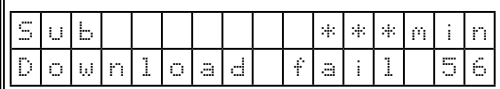	Turn the power off then back on. Updating starts automatically. Carry out the update in an environment that has little network load.
57	Firmware download error received (line congestion) after logging in to DPMS when rewriting firmware such as Sub CPU, DSP, FPGA, and PLD.		Turn the power off then back on. Updating starts automatically. Carry out the update in an environment that has little network load.
58	Firmware download error received (connection failure) after logging in to DPMS when rewriting firmware such as Sub CPU, DSP, FPGA, and PLD.		Turn the power off then back on. Updating starts automatically. Carry out the update in an environment that has little network load.
5A	NACK received when "C" command sent to Sub CPU, DSP, FPGA, PLD etc.	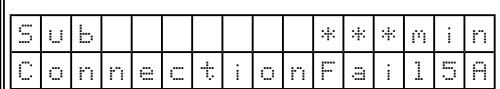	Turn the power off then back on. Updating starts automatically.
5B	NACK received when "L" command sent to Sub CPU, DSP, FPGA, PLD etc.	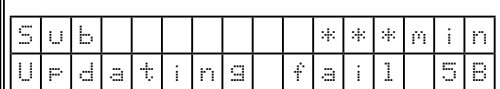	Turn the power off then back on. Updating starts automatically.
5C	Sub CPU, DSP, FPGA, PLD etc. failed to receive firmware for rewriting sent from DM860 (when timed out).	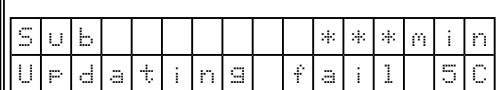	Turn the power off then back on. Updating starts automatically.
5D	Sub CPU, DSP, FPGA, PLD etc. failed to receive firmware for rewriting sent from DM860 (when an error).		Turn the power off then back on. Updating starts automatically.
5E	Invalid data in firmware such as Sub CPU, DSP, FPGA, and PLD for rewriting sent from DM860 (when a Check Sum error).		Turn the power off then back on. Updating starts automatically.
5F	Invalid data in firmware such as Sub CPU, DSP, FPGA, and PLD for rewriting sent from DM860 (invalid data received).	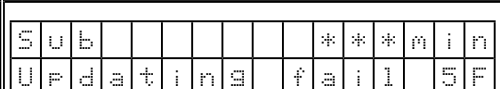	Turn the power off then back on. Updating starts automatically.
60	NACK received when "P" command sent to Sub CPU, DSP, FPGA, PLD etc.	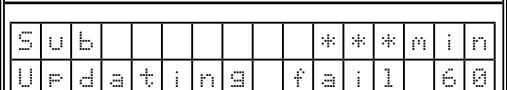	Turn the power off then back on. Updating starts automatically.
61	NACK received when "I" command sent to Sub CPU, DSP, FPGA, PLD etc.		Turn the power off then back on. Updating starts automatically.
62	Start failure of Sub μ-com.	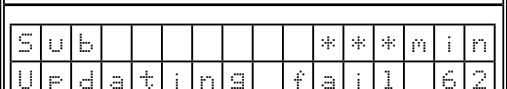	Turn the power off then back on. Updating starts automatically.
80	Failure to acquire serial flash data and before deleting serial flash.		Turn the power off then back on. Updating starts automatically.

Error Code	Details of Error code	Display	Coping strategies
81	Failure to delete data before rewriting serial flash.	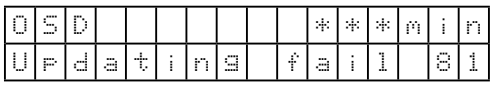	Turn the power off then back on. Updating starts automatically.
82	Failure to receive firmware for serial flash rewriting sent by DM860 (when timed out).		Turn the power off then back on. Updating starts automatically.
83	Failure to receive firmware for serial flash rewriting sent by DM860 (when an error).		Turn the power off then back on. Updating starts automatically.
84	Failure to receive firmware for serial flash rewriting sent by DM860 (when a Check Sum error).	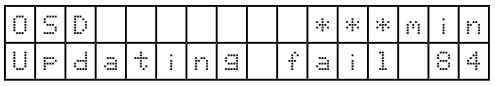	Turn the power off then back on. Updating starts automatically.
85	Failure to receive firmware for serial flash rewriting sent by DM860 (when invalid data received).	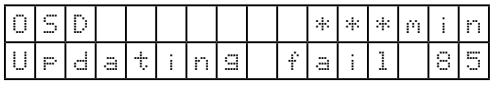	Turn the power off then back on. Updating starts automatically.
86	Failure to rewrite when writing data in serial flash.	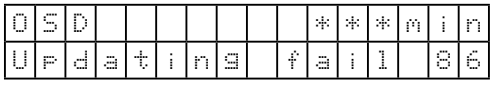	Turn the power off then back on. Updating starts automatically.
A0	Failure to acquire (Application Mode) IP address before rewriting DM860 (AutoIP).	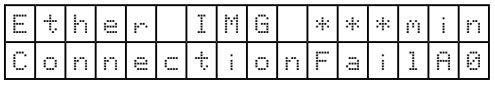	Check the network connection. Carry out the update in an environment that has little network load.
A1	Failure to acquire (Application Mode) IP address before rewriting DM860 (when timed out).	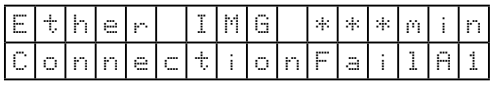	Check the network connection. Carry out the update in an environment that has little network load.
A2	Notification of invalid login via DPMS access when rewriting DM860 related firmware (Application Mode).	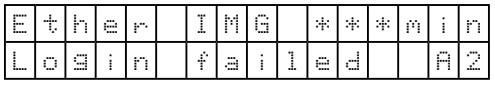	Check the network connection. Carry out the update in an environment that has little network load.
A3	Notification of line congestion via DPMS access when rewriting DM860 related firmware (Application Mode).	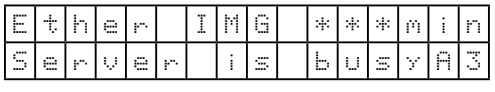	Check the network connection. Carry out the update in an environment that has little network load.
A4	Notification of connection failure via DPMS access when rewriting DM860 related firmware (Application Mode).	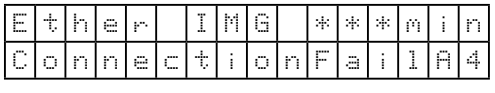	Check the network connection. Carry out the update in an environment that has little network load.
A6	Firmware data error message received after DPMS login when rewriting DM860 related firmware (Application Mode).	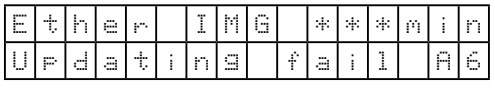	Turn the power off then back on. Updating starts automatically. Carry out the update in an environment that has little network load.
A7	When rewriting DM860 related firmware (Application Mode), request was made for firmware data after DPMS login but it timed out.	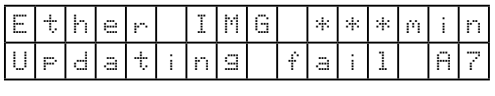	Turn the power off then back on. Updating starts automatically. Carry out the update in an environment that has little network load.
A8	Failure to acquire (Boot Loader Mode) IP address before rewriting DM860 (AutoIP).	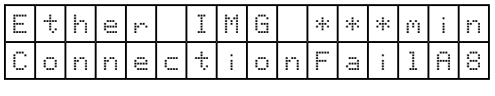	Check the network connection. Carry out the update in an environment that has little network load.
A9	Failure to acquire (Boot Loader Mode) IP address before rewriting DM860 (when timed out).		Check the network connection. Carry out the update in an environment that has little network load.
AA	Notification of invalid login via DPMS access when rewriting DM860 related firmware (Boot Loader Mode).	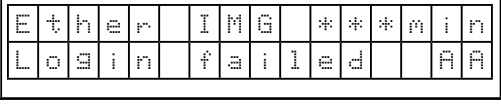	Check the network connection. Carry out the update in an environment that has little network load.

Error Code	Details of Error code	Display	Coping strategies
AB	Notification of line congestion via DPMS access when rewriting DM860 related firmware (Boot Loader Mode).		Check the network connection. Carry out the update in an environment that has little network load.
AC	Notification of connection failure via DPMS access when rewriting DM860 related firmware (Boot Loader Mode).		Check the network connection. Carry out the update in an environment that has little network load.
AE	Firmware download error message received (when download fails) when rewriting DM860 related firmware (Boot Loader Mode).		Turn the power off then back on. Updating starts automatically. Carry out the update in an environment that has little network load.
AF	Firmware download error message received (line congestion) when rewriting DM860 related firmware (Boot Loader Mode).		Turn the power off then back on. Updating starts automatically. Carry out the update in an environment that has little network load.
B0	Firmware download error message received (connection failure) when rewriting DM860 related firmware (Boot Loader Mode).		Turn the power off then back on. Updating starts automatically. Carry out the update in an environment that has little network load.
B2	Error message received when rewriting DM860 related firmware.		Turn the power off then back on. Updating starts automatically. Carry out the update in an environment that has little network load.

Device display when firmware updated

Target of devide when firmware updated.

Target of device	Display	Error cpde
Main	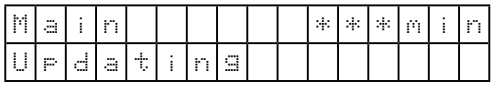	10~15 36~3C
Sub	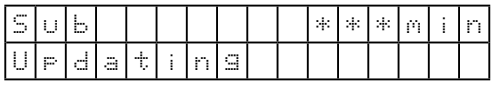	50~52 54~58 5A~62
Audio PLD	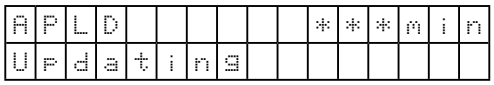	50~52 54~58 5A~62
DSP		50~52 54~58 5A~62
OSD (FPGA/Program/Font Data)		50~52 54~58 5A 62 80~86
DM860 Boot Loader	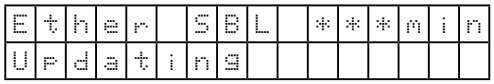	A0~A4 A6~AC AE~B0 B2
DM860 Image		A0~A4 A6~AC AE~B0 B2

2. How to update by DFW

2.1. Preparations before starting the operation2

(1) Personal Computer (Installed "DFW_0006_AV7005_(Rev.1.0.13)_exe").

(2) RS-232 cable (9P (Male), Straight).

2.2. Connection of the AV receiver

(1) Confirm the power on/off switch of the AV receiver is turning off.

(2) Connect the RS-232C cable from PC with the AV receiver.

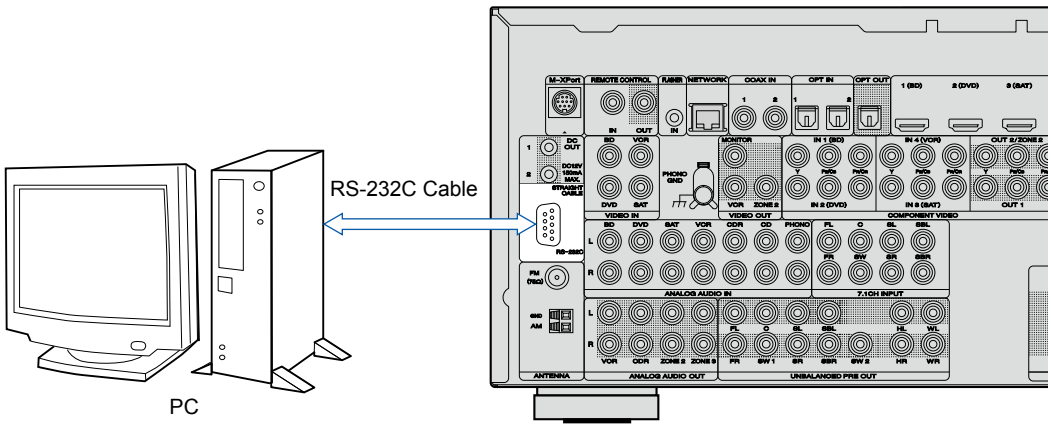

2.3. Turn on the AV receiver

Operate the following. Turn on the AV receiver.

(1) Connect the power cable to the AC outlet while simultaneously pushing the "CURSOR ◀" button and the "RETURN" button of the front panel.

(2) Confirm the power indicator is green and “WRITTING” is displayed in the front panel.

2.4. Run the DFW

Run the "DFW_0006_AV7005_(Rev.1.0.13)" on desktop of PC.

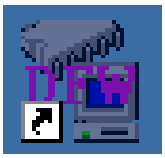

2.5. Communication check

(1) Click the “Check Comm.” button.

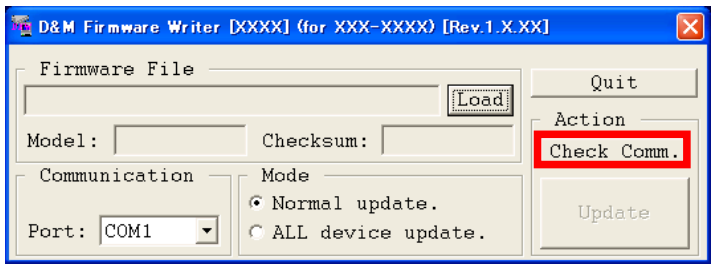

(2) When connection is good, then you can see the “Communication check OK.” message.

(3) If connection is not good, then you can see the “Communication error!” message.

Please confirm the following

(a) Check the connection of the AV receiver and PC. (refer to “2.2. Connection of the AV receiver”)

(b) Check the operation mode of the AV receiver. (refer to “2.3. Turn on the AV receiver”)

(c) Check the selection of the RS-232C port number of PC.

2.6. Download the firmware

(1) Click the "Load" button.

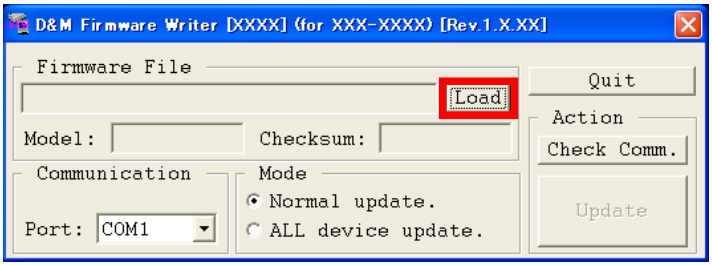

(2) Download the firmware from the specified download source to PC.

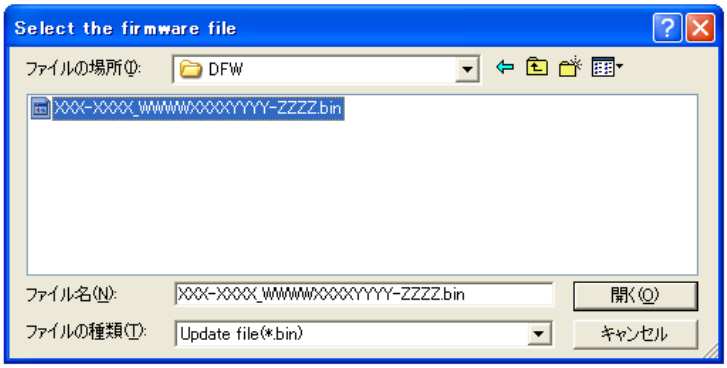

2.7. Complete the firmware updating

(1) Click the “Update” button.

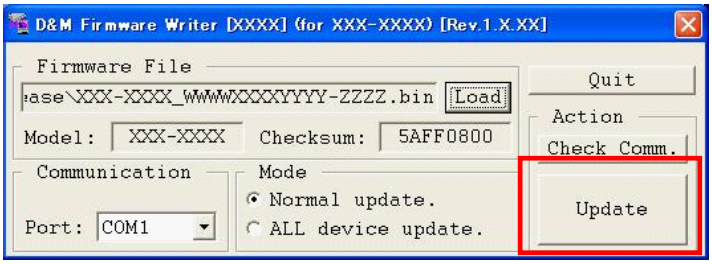

(2) When writing of the firmware is completed, the power of this unit turns on automatically and you can see the “Update completed” message.

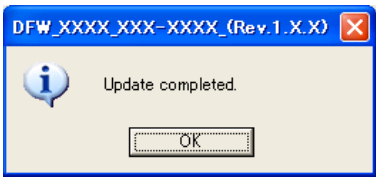

(3) If you can’t complete the firmware update, please retry the firmware update from “2.3. Turn on the AV receiver”.

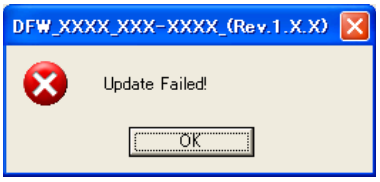

2.8. Notice:

Please keep the following notice for firmware update.

(a) Keep the PC environment

(b) Avoid the communication cable from the electrical noise source.
(e.g. telephone cable, AC line, a fluorescent light)

(c) Don’t remove cable during update.

(d) Don’t turn off the power during update.

(e) Don’t run other PC application during update.

(f) Stop the resident program on PC (Virus checker and System check utilitu, etc)

(g) Stop the screen saver on PC.

(h) Stop the power save ability on PC.

(i) In case of laptop PC, Use the AC adaptor.

Confirming the firmware’s number after upgraded

After completion of the updating operation, the new version number can confirmed by starting up the AV7005 according to the following procedure.

With the following operation, the AV7005 can be set to the Flash ROM Version-Number Confiemation mode.

Turn on power switch while simultaneously pressing "STATUS" and "RETURN" buttons on the front panel. Every time the "STATUS" button is pressed, version number of the Model, Main, Sub, … are indicated on the front panel section in the following order.

Symbols in the table

○ This indicates the audio output channels or surround parameters that can be set.
◎ This indicates the audio output channels. The output channels depend on the settings of "Speaker Config.".

Surround mode	Channel output							Surround Parameter			
	Front L/R	Center	Surround L/R	Surround back L/R	Front height L/R	Front wide L/R	Subwoofer	HT-EQ *5	DRC *6	D. Comp *7	LFE *8
PURE DIRECT (2channel)	○						◎*4		○	○	
PURE DIRECT (Multi-channel)	○	◎	◎	◎*1	◎*1	◎*1	◎		○	○	○
DIRECT (2channel)	○						◎*4		○	○	
DIRECT (Multi-channel)	○	◎	◎	◎*1	◎*1	◎*1	◎		○	○	○
STEREO	○						◎	○	○	○	○
MULTI CH IN	○	◎	◎	◎			◎	○			○
DOLBY PRO LOGIC IIz	○	◎	◎		◎		◎	○	○	○	
DOLBY PRO LOGIC IIx	○	◎	◎	◎			◎	○	○	○	
DOLBY PRO LOGIC II	○	◎	◎				◎	○	○	○	
DOLBY PRO LOGIC II A-DSX	○	◎	◎		◎*2	◎*3	◎	○	○	○	
DTS NEO:6	○	◎	◎	◎			◎	○	○	○	
DTS NEO:6 A-DSX	○	◎	◎		◎*2	◎*3	◎	○	○	○	
Audyssey DSX	○	◎	◎		◎*2	◎*3	◎	○	○	○	○
DOLBY DIGITAL	○	◎	◎	◎	◎		◎	○		○	○
DOLBY DIGITAL Plus	○	◎	◎	◎	◎		◎	○		○	○
DOLBY TrueHD	○	◎	◎	◎	◎		◎	○	○		○
DTS SURROUND	○	◎	◎	◎	◎		◎	○		○	○
DTS 96/24	○	◎	◎	◎	◎		◎	○		○	○
DTS-HD	○	◎	◎	◎	◎		◎	○		○	○
DTS Express	○	◎	◎	◎	◎		◎	○		○	○
MULTI CH STEREO	○	◎	◎	◎			◎	○		○	○
NEURAL	○	◎	◎	◎			◎	○			
DOLBY VIRTUAL SPEAKER	○						◎	○			
DOLBY HEADPHONE	○										

*1 A signal for each channel contained in an input signal is output as audio.
*2 If "Audyssey DSX" is set to "ON–Height–", sound is output from the front height speakers.
*3 If "Audyssey DSX" is set to "ON–Wide–", sound is output from the front wide speakers.
*4 Only when "Subwoofer Mode" is set to "LFE+Main", sound is output from the subwoofer.
*5 For HD Audio whose sampling frequency of an input signal is more than 96 kHz, this sound parameter cannot be set.
*6 This item can be selected when a Dolby TrueHD signal is played.
*7 This item can be selected when a Dolby Digital or DTS signal is played.
*8 This item can be selected when a Dolby Digital or DTS signal or DVD-Audio is played.

Surround mode	Surround Parameter					Tone ＊9	Audyssey Settings ＊10			Audyssey DSX™ Soundstage ＊10	M-DAX ＊13
	Height Gain	PRO LOGIC IIz/IIx Music mode only			NEO:6 Music mode only		MultEQ® XT	Dynamic EQ® ＊11	Dynamic Volume® ＊12		
		Panorama	Dimension	C.Width	C.Image						
PURE DIRECT (2 channel)											
PURE DIRECT (Multi-channel)											
DIRECT (2 channel)											
DIRECT (Multi-channel)											
STEREO						○	○	○	○		○
MULTI CH IN						○	○	○	○	○	
DOLBY PRO LOGIC IIz	○					○	○	○	○		○
DOLBY PRO LOGIC IIx		○	○	○		○	○	○	○	○	○
DOLBY PRO LOGIC II		○	○	○		○	○	○	○	○	○
DOLBY PRO LOGIC II A-DSX		○	○	○		○	○	○	○	○	○
DTS NEO:6					○	○	○	○	○	○	○
DTS NEO:6 A-DSX					○	○	○	○	○	○	○
Audyssey DSX						○	○	○	○	○	
DOLBY DIGITAL						○	○	○	○	○	
DOLBY DIGITAL Plus						○	○	○	○	○	
DOLBY TrueHD						○	○	○	○	○	
DTS SURROUND						○	○	○	○	○	
DTS 96/24						○	○	○	○	○	
DTS-HD						○	○	○	○	○	
DTS Express						○	○	○	○	○	
MULTI CH STEREO						○	○	○	○		○
NEURAL						○	○	○	○		○
DOLBY VIRTUAL SPEAKER						○	○	○	○		○
DOLBY HEADPHONE						○	○	○	○		○

＊9 This item cannot be set when “Dynamic EQ” is set to “ON”.
＊10 For HD Audio whose sampling frequency of an input signal is more than 96 kHz, this sound parameter cannot be set.
＊11 This item cannot be set when “MultEQ XT” is set to “OFF” or “Manual”.
＊12 This item cannot be set when “Dynamic EQ” is set to “OFF”.
＊13 This item can be set when the input signal is analog, PCM 48 kHz or 44.1 kHz.

Symbols in the table

○ This indicates the selectable surround mode.

Surround mode	NOTE	Input signal types and formats																
		ANALOG	PCM		DTS-HD		DTS					DOLBY		DOLBY DIGITAL				
			LINEAR PCM (multi ch)	LINEAR PCM (2ch)	DTS-HD Master Audio	DTS-HD High Resolution Audio	DTS EXPRESS	DTS ES DSCRT (With Flag)	DTS ES MTRX (With Flag)	DTS (5.1ch)	DTS 96/24	DOLBY TrueHD	DOLBY DIGITAL Plus	DOLBY DIGITAL EX (With Flag)	DOLBY DIGITAL EX (With no Flag)	DOLBY DIGITAL (5.1/5/4ch)	DOLBY DIGITAL (4/3ch)	DOLBY DIGITAL (2ch)
DTS SURROUND																		
DTS-HD MSTR	＊5				○													
DTS-HD HI RES	＊5					○												
DTS ES DSCRT6.1	＊1＊3							○										
DTS ES MTRX6.1	＊1＊3								○									
DTS SURROUND	＊5							○	○	○								
DTS 96/24	＊5										○							
DTS (–HD) + PLIIx MOVIE	＊2＊3				○	○	○	○	○	○	○							
DTS (–HD) + PLIIx MUSIC	＊1＊3				○	○	○	○	○	○	○							
DTS (–HD) + PLIIz	＊4				○	○	○	○	○	○	○							
DTS EXPRESS	＊5						○											
DTS (–HD) + NEO:6	＊1＊3				○	○	○		○	○	○							
DTS NEO:6 CINEMA	＊5	○		○														○
DTS NEO:6 MUSIC	＊5	○		○														○
DTS NEO:6 CINEMA A-DSX		○		○														○
DTS NEO:6 MUSIC A-DSX		○		○														○
Audyssey DSX					○	○	○	○	○	○	○							
DOLBY SURROUND																		
DOLBY TrueHD	＊5											○						
DOLBY DIGITAL+	＊5												○					
DOLBY DIGITAL EX	＊1＊3													○	○	○	○	
DOLBY (D+) (HD) +EX	＊1＊3											○	○					
DOLBY DIGITAL	＊5													○	○	○	○	
DOLBY (D) (D+) (HD) +PLIIx MOVIE	＊2＊3											○	○	○	○	○	○	
DOLBY (D) (D+) (HD) +PLIIx MUSIC	＊1＊3											○	○	○	○	○	○	
DOLBY (D) (D+) (HD) +PLIIz	＊4											○	○	○	○	○	○	
DOLBY PRO LOGIC IIx MOVIE	＊1＊3	○		○														○
DOLBY PRO LOGIC IIx MUSIC	＊1＊3	○		○														○
DOLBY PRO LOGIC IIx GAME	＊1＊3	○		○														○
DOLBY PRO LOGIC IIz	＊4	○		○														○
DOLBY PRO LOGIC II MOVIE	＊5	○		○														○
DOLBY PRO LOGIC II MUSIC	＊5	○		○														○
DOLBY PRO LOGIC II GAME	＊5	○		○														○

＊1 If “Speaker Config.” – “S.Back” is set to “None”, this surround mode cannot be selected.
＊2 If “Speaker Config.” – “S.Back” is set to “1spkr” or “None”, this surround mode cannot be selected.
＊3 This surround mode can be selected when “Amp Assign” is set to “Normal”.
＊4 If “Speaker Config.” – “F.Height” is set to “None”, this surround mode cannot be selected.
＊5 The same was when “Audyssey DSX™” setting is set to “ON”.

Surround mode	NOTE	Input signal types and formats																
		ANALOG	PCM		DTS-HD		DTS					DOLBY		DOLBY DIGITAL				
			LINEAR PCM (multi ch)	LINEAR PCM (2ch)	DTS-HD Master Audio	DTS-HD High Resolution Audio	DTS EXPRESS	DTS ES DSCRT (With Flag)	DTS ES MTRX (With Flag)	DTS (5.1ch)	DTS 96/24	DOLBY TrueHD	DOLBY DIGITAL Plus	DOLBY DIGITAL EX (With Flag)	DOLBY DIGITAL EX (With no Flag)	DOLBY DIGITAL (5.1/5/4ch)	DOLBY DIGITAL (4/3ch)	DOLBY DIGITAL (2ch)
DOLBY SURROUND																		
DOLBY PRO LOGIC II MOVIE A-DSX		○		○														○
DOLBY PRO LOGIC II MUSIC A-DSX		○		○														○
DOLBY PRO LOGIC II GAME A-DSX		○		○														○
Audyssey DSX												○	○	○	○	○	○	
DOLBY VIRTUAL SPEAKER		○	○	○	○	○	○	○	○	○	○	○	○	○	○	○	○	○
DOLBY HEADPHONE		○	○	○	○	○	○	○	○	○	○	○	○	○	○	○	○	○
MULTI CH IN																		
MULTI CH IN	∗5		○															
MULTI CH IN + PLIIx MOVIE	∗2∗3		○															
MULTI CH IN + PLIIx MUSIC	∗1∗3		○															
MULTI CH IN + PLIIz	∗4		○															
MULTI CH IN + Dolby EX	∗3		○															
MULTI CH IN 7.1	∗3		○ (7.1)															
Audyssey DSX			○															
DIRECT																		
DIRECT		○	○	○	○	○	○	○	○	○	○	○	○	○	○	○	○	○
PURE DIRECT																		
PURE DIRECT		○	○	○	○	○	○	○	○	○	○	○	○	○	○	○	○	○
MULTI CH STEREO		○	○	○				○	○	○	○			○	○	○	○	○
STEREO																		
STEREO		○	○	○	○	○	○	○	○	○	○	○	○	○	○	○	○	○
NEURAL																		
NEURAL		○		○														○
AUTO																		
AUTO		○	○	○	○	○	○	○	○	○	○	○	○	○	○	○	○	○

∗1 If “Speaker Config.” – “S.Back” is set to “None”, this surround mode cannot be selected.
∗2 If “Speaker Config.” – “S.Back” is set to “1spkr” or “None”, this surround mode cannot be selected.
∗3 This surround mode can be selected when “Amp Assign” is set to “Normal”.
∗4 If “Speaker Config.” – “F.Height” is set to “None”, this surround mode cannot be selected.
∗5 The same was when “Audyssey DSX™” setting is set to “ON”.

TROUBLE SHOOTING

1. POWER

1.1. Power not turn on

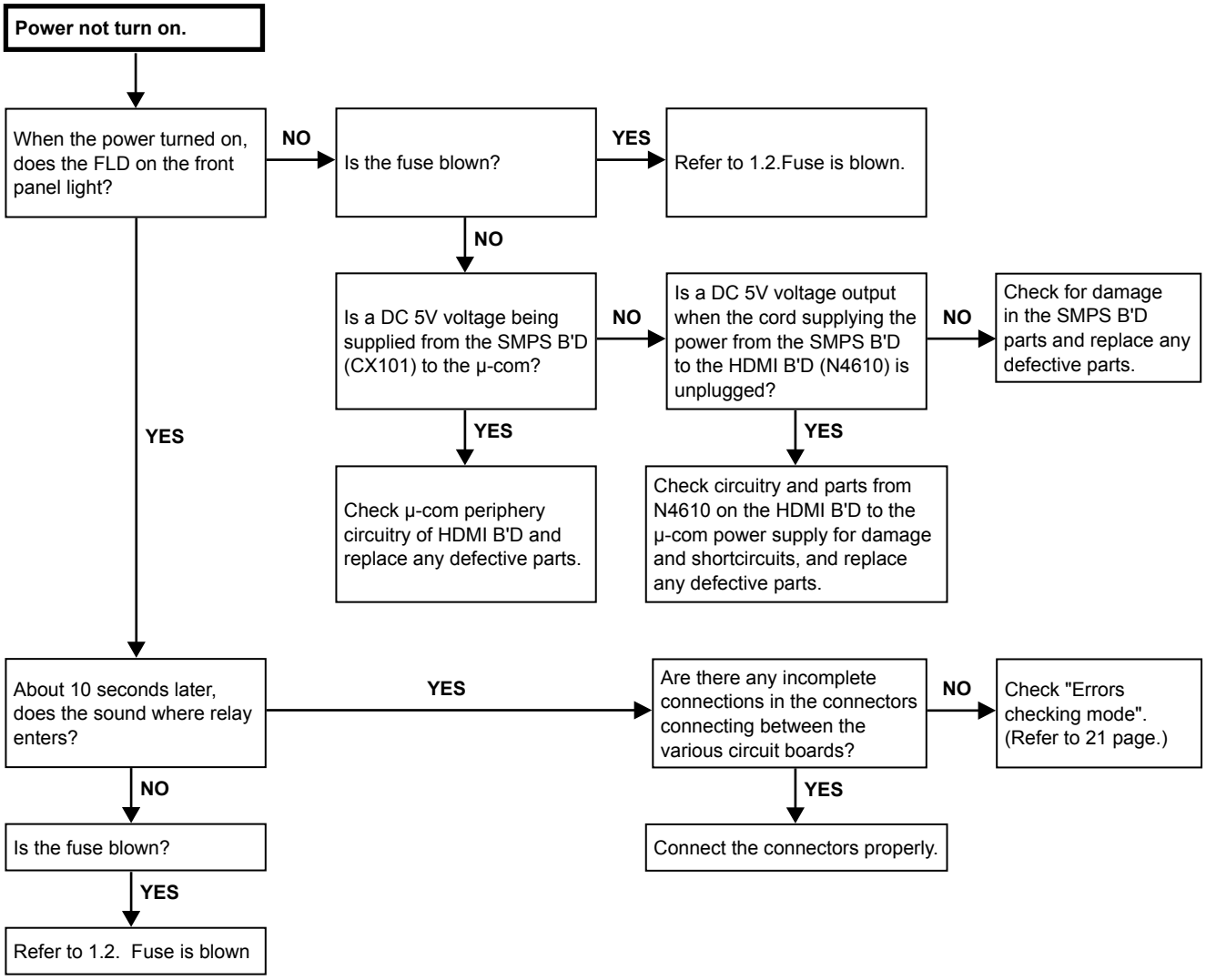

1.2. Fuse is blown

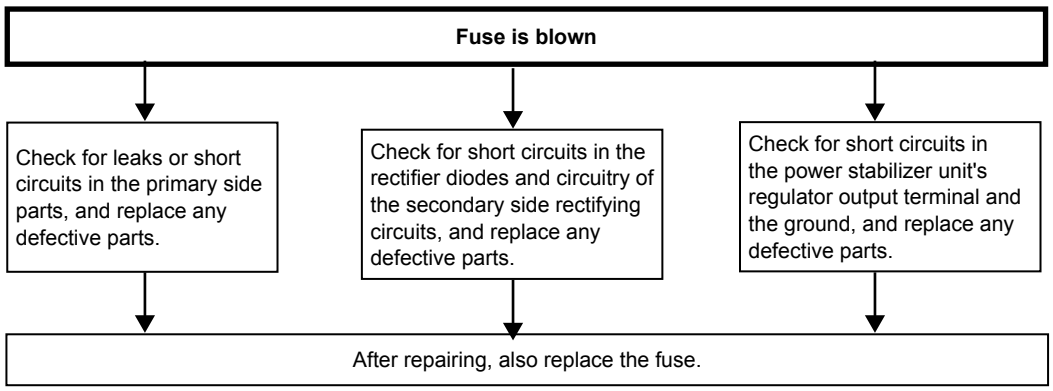

2. Analog video

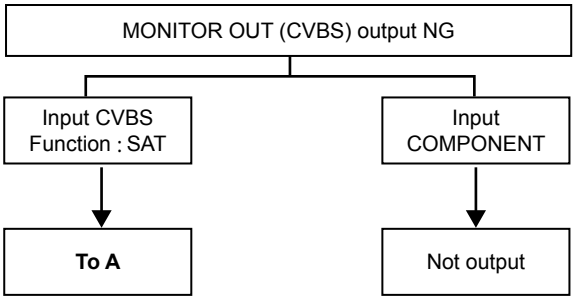

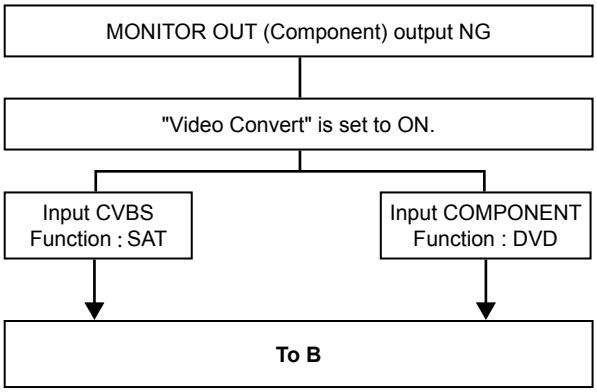

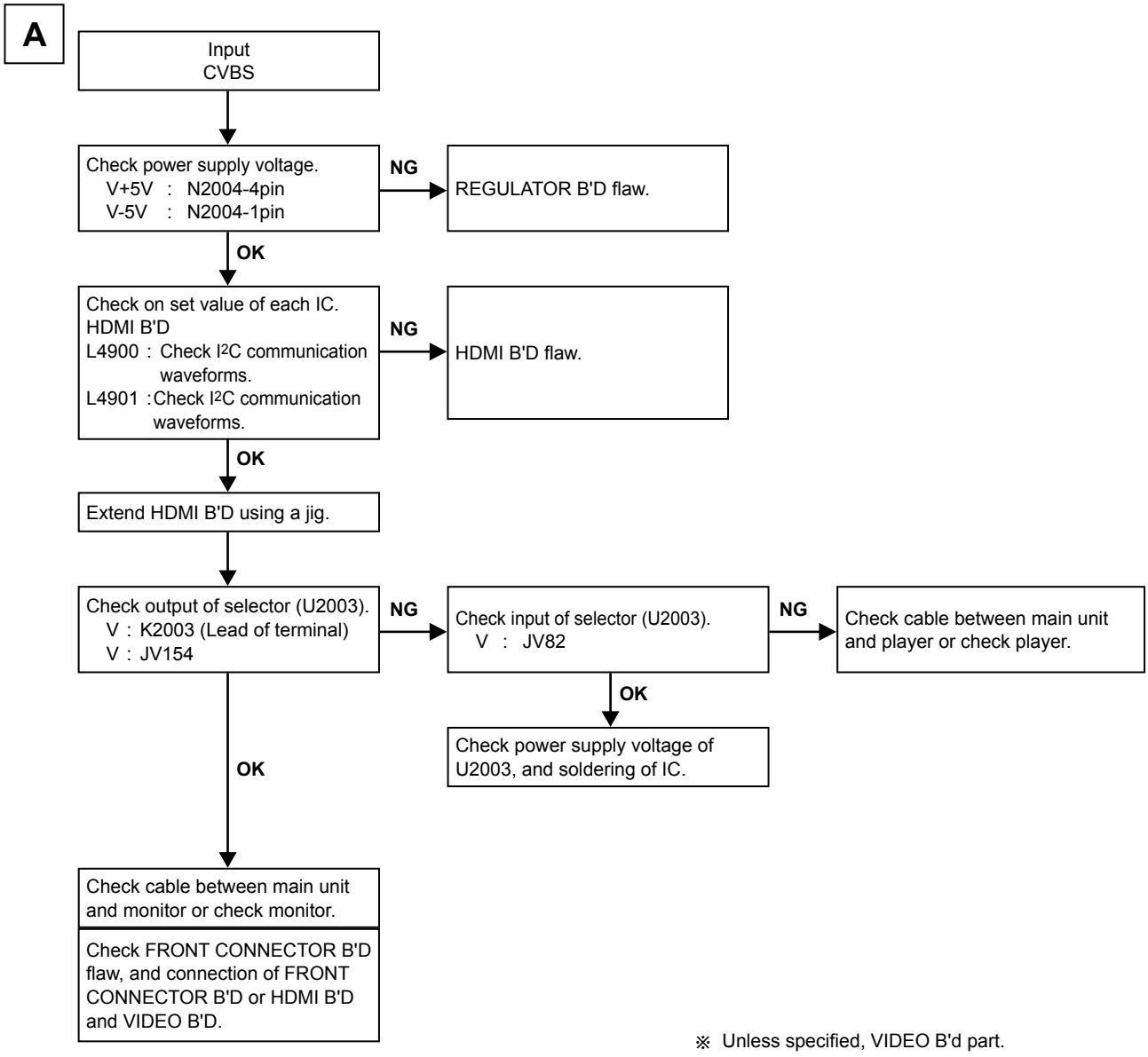

※ Unless specified, VIDEO B'd part.

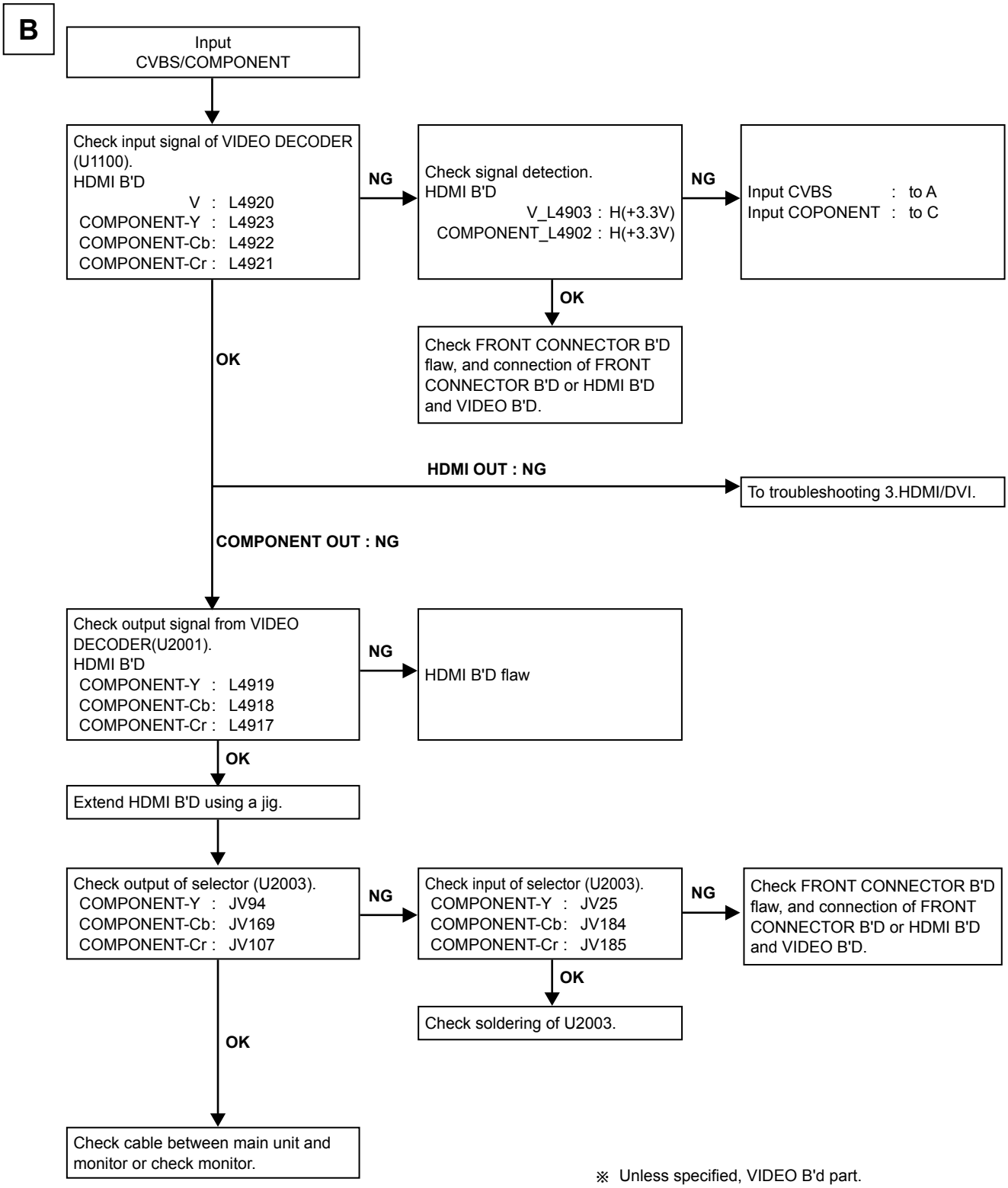

※ Unless specified, VIDEO B'd part.

C

Input
COMPONENT

Check of power supply voltage
V+5V : N2004-4pin
V-5V : N2004-1pin

NG → REGULATOR B'D flaw

OK

Check on set value of each IC.
HDMI B'D
L4900 : Check I2C communication waveforms.
L4901 : Check I2C communication waveforms.

NG → HDMI B'D flaw

OK

Extend HDMI B'D using a jig.

Check output of selector (U2003).
COMPONENT-Y : JV1
COMPONENT-Cb: JV128
COMPONENT-Cr : JV31

NG → Check input of selector (U2003).
COMPONENT-Y : JV80
COMPONENT-Cb: JV79
COMPONENT-Cr : JV175

NG → Check cable between main unit and monitor or check monitor.

OK → Check power supply voltage of U2003, and surrounding circuitry soldering.

OK → Check FRONT CONNECTOR B'D flaw, and connection of FRONT CONNECTOR B'D or HDMI B'D and VIDEO B'D.

※ Unless specified, VIDEO B'd part.

I2C communication waveforms

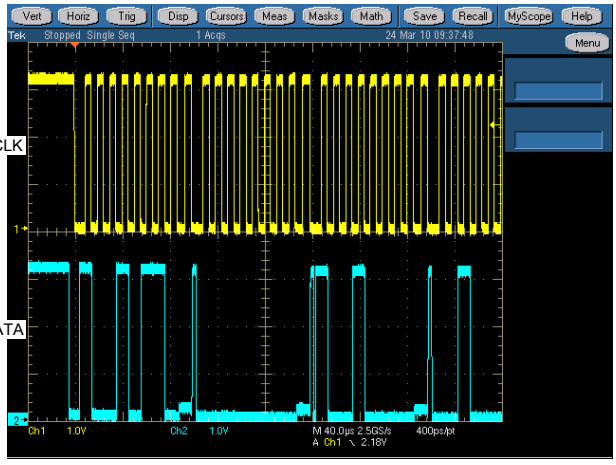

3. HDMI/DVI.

3.1. No picture or sound is output

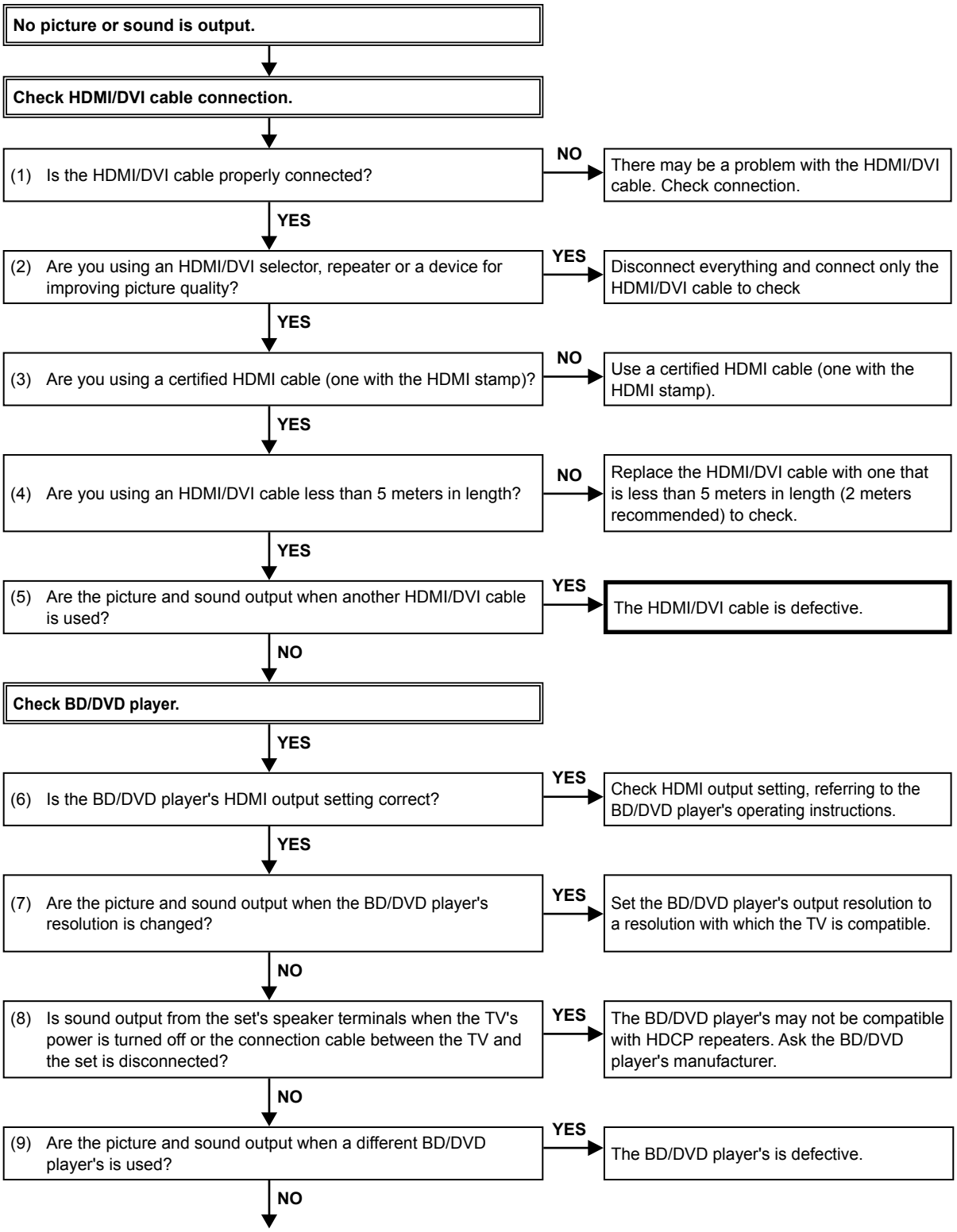

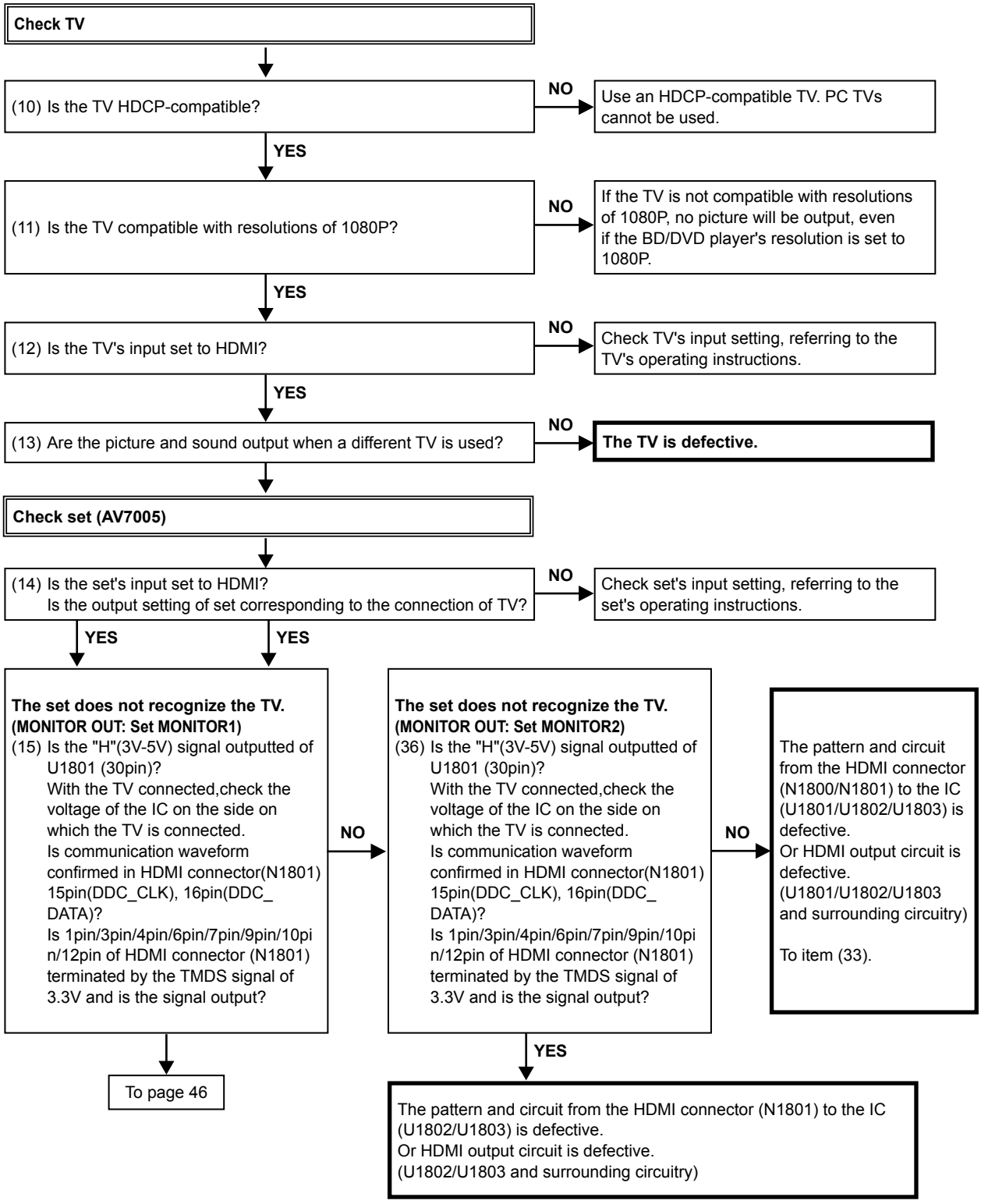
Check TV
(10) Is the TV HDCP-compatible?
NO
Use an HDCP-compatible TV. PC TVs cannot be used.
YES
(11) Is the TV compatible with resolutions of 1080P?
NO
If the TV is not compatible with resolutions of 1080P, no picture will be output, even if the BD/DVD player's resolution is set to 1080P.
YES
(12) Is the TV's input set to HDMI?
NO
Check TV's input setting, referring to the TV's operating instructions.
YES
(13) Are the picture and sound output when a different TV is used?
NO
The TV is defective.
Check set (AV7005)
(14) Is the set's input set to HDMI?
Is the output setting of set corresponding to the connection of TV?
NO
Check set's input setting, referring to the set's operating instructions.
YES
YES
The set does not recognize the TV.
(MONITOR OUT: Set MONITOR1)
(15) Is the "H"(3V-5V) signal outputted of U1801 (30pin)?
With the TV connected,check the voltage of the IC on the side on which the TV is connected.
Is communication waveform confirmed in HDMI connector(N1801) 15pin(DDC_CLK), 16pin(DDC_ DATA)?
Is 1pin/3pin/4pin/6pin/7pin/9pin/10pi n/12pin of HDMI connector (N1801) terminated by the TMDS signal of 3.3V and is the signal output?
NO
The set does not recognize the TV.
(MONITOR OUT: Set MONITOR2)
(36) Is the "H"(3V-5V) signal outputted of U1801 (30pin)?
With the TV connected,check the voltage of the IC on the side on which the TV is connected.
Is communication waveform confirmed in HDMI connector(N1801) 15pin(DDC_CLK), 16pin(DDC_ DATA)?
Is 1pin/3pin/4pin/6pin/7pin/9pin/10pi n/12pin of HDMI connector (N1801) terminated by the TMDS signal of 3.3V and is the signal output?
NO
The pattern and circuit from the HDMI connector (N1800/N1801) to the IC (U1801/U1802/U1803) is defective.
Or HDMI output circuit is defective.
(U1801/U1802/U1803 and surrounding circuitry)
To item (33).
YES
To page 46
The pattern and circuit from the HDMI connector (N1801) to the IC (U1802/U1803) is defective.
Or HDMI output circuit is defective.
(U1802/U1803 and surrounding circuitry)

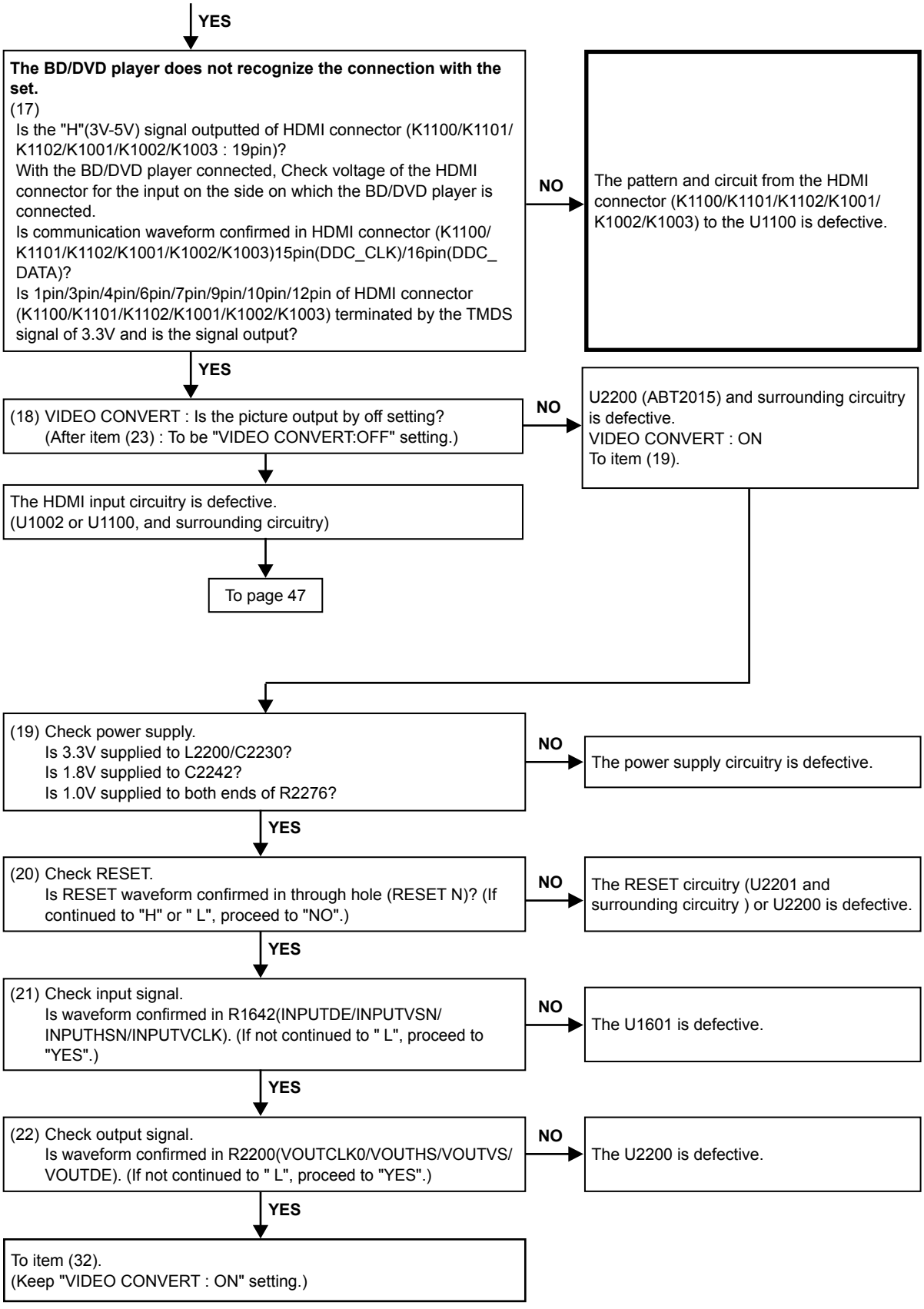
YES
The BD/DVD player does not recognize the connection with the set.
(17)
Is the "H"(3V-5V) signal outputted of HDMI connector (K1100/K1101/K1102/K1001/K1002/K1003 : 19pin)?
With the BD/DVD player connected, Check voltage of the HDMI connector for the input on the side on which the BD/DVD player is connected.
Is communication waveform confirmed in HDMI connector (K1100/K1101/K1102/K1001/K1002/K1003)15pin(DDC_CLK)/16pin(DDC_DATA)?
Is 1pin/3pin/4pin/6pin/7pin/9pin/10pin/12pin of HDMI connector (K1100/K1101/K1102/K1001/K1002/K1003) terminated by the TMDS signal of 3.3V and is the signal output?
NO
The pattern and circuit from the HDMI connector (K1100/K1101/K1102/K1001/K1002/K1003) to the U1100 is defective.
YES
(18) VIDEO CONVERT : Is the picture output by off setting?
(After item (23) : To be "VIDEO CONVERT:OFF" setting.)
NO
U2200 (ABT2015) and surrounding circuitry is defective.
VIDEO CONVERT : ON
To item (19).
The HDMI input circuitry is defective.
(U1002 or U1100, and surrounding circuitry)
To page 47
(19) Check power supply.
Is 3.3V supplied to L2200/C2230?
Is 1.8V supplied to C2242?
Is 1.0V supplied to both ends of R2276?
NO
The power supply circuitry is defective.
YES
(20) Check RESET.
Is RESET waveform confirmed in through hole (RESET N)? (If continued to "H" or " L", proceed to "NO".)
NO
The RESET circuitry (U2201 and surrounding circuitry) or U2200 is defective.
YES
(21) Check input signal.
Is waveform confirmed in R1642(INPUTDE/INPUTVSN/INPUTHSN/INPUTVCLK). (If not continued to " L", proceed to "YES".)
NO
The U1601 is defective.
YES
(22) Check output signal.
Is waveform confirmed in R2200(VOUTCLK0/VOUTHS/VOUTVS/VOUTDE). (If not continued to " L", proceed to "YES".)
NO
The U2200 is defective.
YES
To item (32).
(Keep "VIDEO CONVERT : ON" setting.)

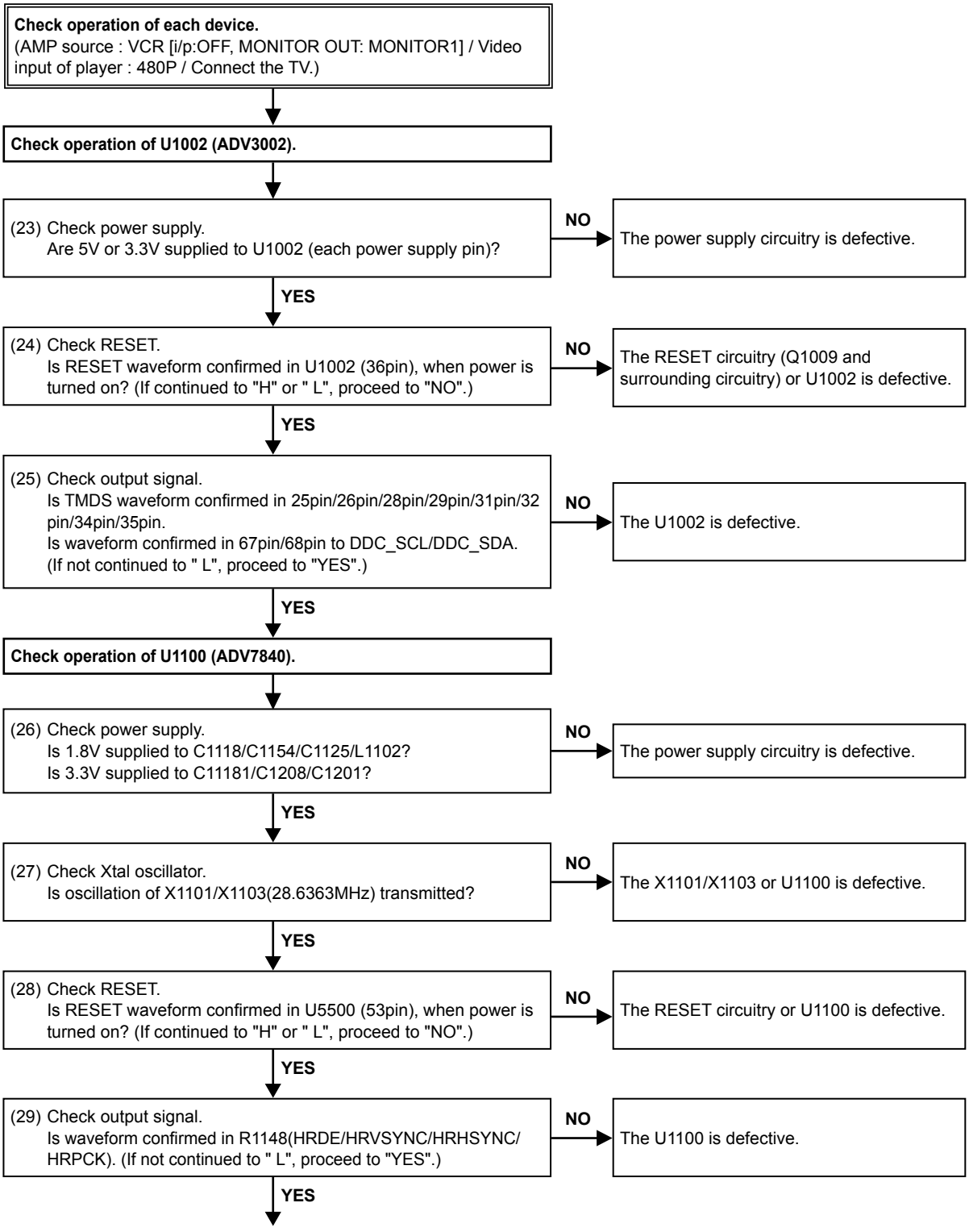
Check operation of each device.
(AMP source : VCR [i/p:OFF, MONITOR OUT: MONITOR1] / Video input of player : 480P / Connect the TV.)
Check operation of U1002 (ADV3002).
(23) Check power supply.
Are 5V or 3.3V supplied to U1002 (each power supply pin)?
NO
The power supply circuitry is defective.
YES
(24) Check RESET.
Is RESET waveform confirmed in U1002 (36pin), when power is turned on? (If continued to "H" or " L", proceed to "NO".)
NO
The RESET circuitry (Q1009 and surrounding circuitry) or U1002 is defective.
YES
(25) Check output signal.
Is TMDS waveform confirmed in 25pin/26pin/28pin/29pin/31pin/32 pin/34pin/35pin.
Is waveform confirmed in 67pin/68pin to DDC_SCL/DDC_SDA.
(If not continued to " L", proceed to "YES".)
NO
The U1002 is defective.
YES
Check operation of U1100 (ADV7840).
(26) Check power supply.
Is 1.8V supplied to C1118/C1154/C1125/L1102?
Is 3.3V supplied to C11181/C1208/C1201?
NO
The power supply circuitry is defective.
YES
(27) Check Xtal oscillator.
Is oscillation of X1101/X1103(28.6363MHz) transmitted?
NO
The X1101/X1103 or U1100 is defective.
YES
(28) Check RESET.
Is RESET waveform confirmed in U5500 (53pin), when power is turned on? (If continued to "H" or " L", proceed to "NO".)
NO
The RESET circuitry or U1100 is defective.
YES
(29) Check output signal.
Is waveform confirmed in R1148(HRDE/HRVSYNC/HRHSYNC/ HRPCK). (If not continued to " L", proceed to "YES".)
NO
The U1100 is defective.
YES

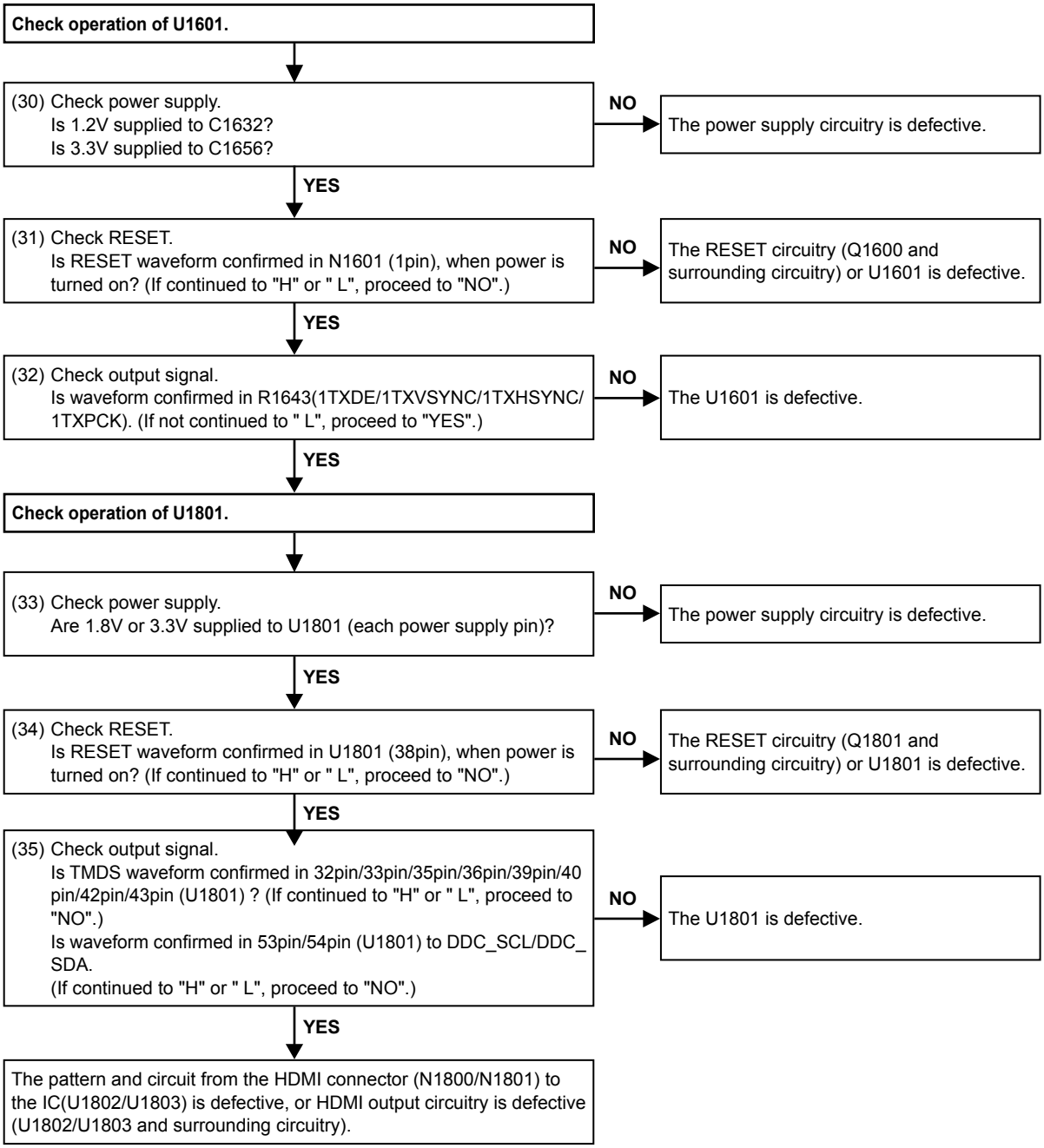
Check operation of U1601.
(30) Check power supply.
Is 1.2V supplied to C1632?
Is 3.3V supplied to C1656?
NO
The power supply circuitry is defective.
YES
(31) Check RESET.
Is RESET waveform confirmed in N1601 (1pin), when power is turned on? (If continued to "H" or " L", proceed to "NO".)
NO
The RESET circuitry (Q1600 and surrounding circuitry) or U1601 is defective.
YES
(32) Check output signal.
Is waveform confirmed in R1643(1TXDE/1TXVSYNC/1TXHSYNC/1TXPCK). (If not continued to " L", proceed to "YES".)
NO
The U1601 is defective.
YES
Check operation of U1801.
(33) Check power supply.
Are 1.8V or 3.3V supplied to U1801 (each power supply pin)?
NO
The power supply circuitry is defective.
YES
(34) Check RESET.
Is RESET waveform confirmed in U1801 (38pin), when power is turned on? (If continued to "H" or " L", proceed to "NO".)
NO
The RESET circuitry (Q1801 and surrounding circuitry) or U1801 is defective.
YES
(35) Check output signal.
Is TMDS waveform confirmed in 32pin/33pin/35pin/36pin/39pin/40 pin/42pin/43pin (U1801) ? (If continued to "H" or " L", proceed to "NO".)
Is waveform confirmed in 53pin/54pin (U1801) to DDC_SCL/DDC_SDA.
(If continued to "H" or " L", proceed to "NO".)
NO
The U1801 is defective.
YES
The pattern and circuit from the HDMI connector (N1800/N1801) to the IC(U1802/U1803) is defective, or HDMI output circuitry is defective (U1802/U1803 and surrounding circuitry).

3.2. HDMI test point and waveforms

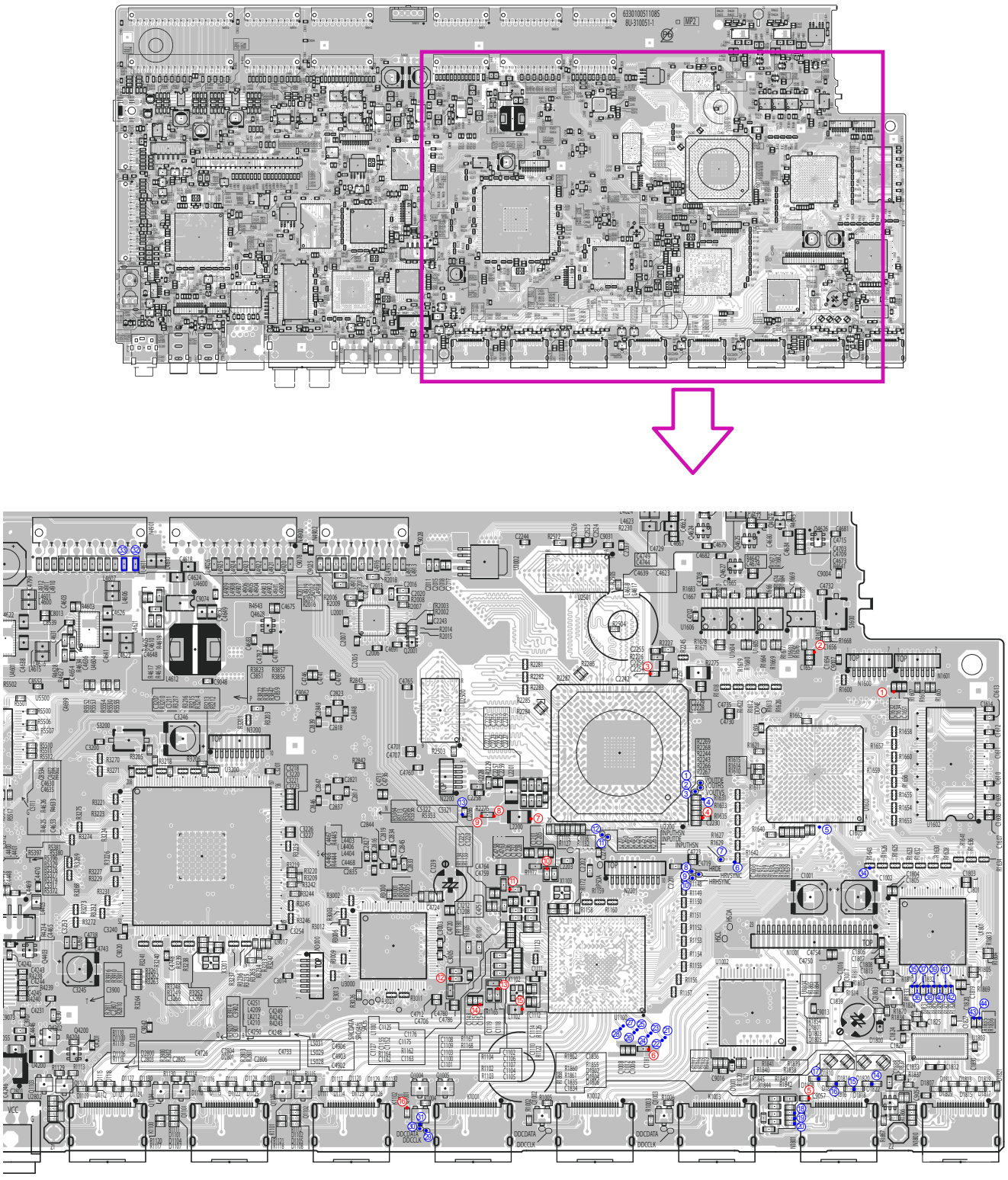

Check the voltage (Red)

No.	
1	1.2V
2	3.3V
3	1.8V
4	3.3V
5	+5V
6	3.3V
7	3.3V
8	1.0V
9	1.0V
10	3.3V
11	1.8V
12	3.3V
13	1.8V
14	1.8V
15	1.8V
16	+5V

Check the wave form (Blue)

No.		No.	
1	VOUTDE	23	RXD_1+
2	VOUTHS	24	RXD_1-
3	VOUTVS	25	RXD_0+
4	VOUTCLK0	26	RXD_0-
5	HRPCK	27	RXD_C+
6	INPUTVCLK	28	RXD_C-
7	INPUTHSN	29	DDC CLK
8	HRDE	30	DDC DATA
9	HRVSYNC	31	HPD
10	HRHSYNC	32	I2C CLK
11	INPUTDE	33	I2C DATA
12	INPUTVSN	34	1TXPCK/1TXDE/ 1TXHSYNC/1TXVSYNC
13	RESETN.	35	TXC-
14	D2+/D2-	36	TXC+
15	D1+/D1-	37	TX0-
16	D0+/D0-	38	TX0+
17	CK+/CK-	39	TX1-
18	HPD	40	TX1+
19	DDC_SDA	41	TX2-
20	DDC_SCL	42	TX2+
21	RXD_2+	43	DDCSCL
22	RXD_2-	44	DDCSDA

DDC_CLK/DDC_DATA/TMDS : Check item (15),(17),(25),(35),(36)

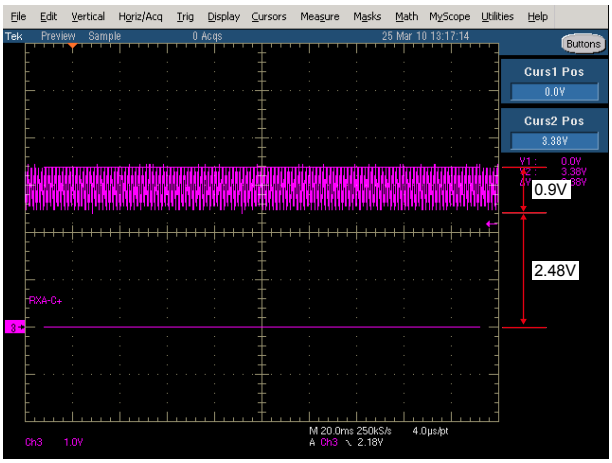

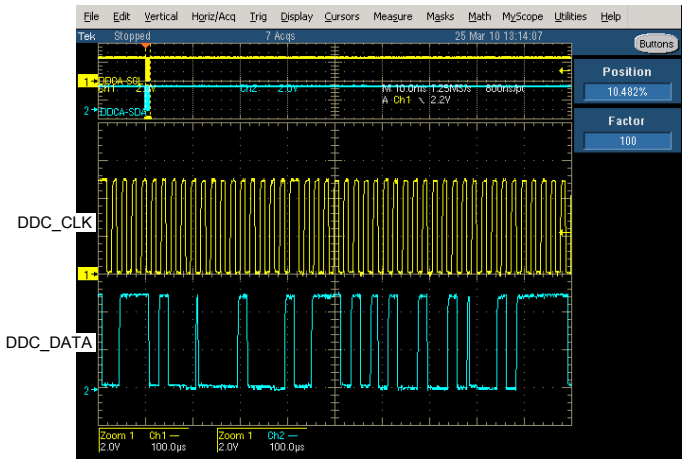

INPUTDE/INPUTVSN/INPUTHSN/INPUTVCLK : Check item (21)

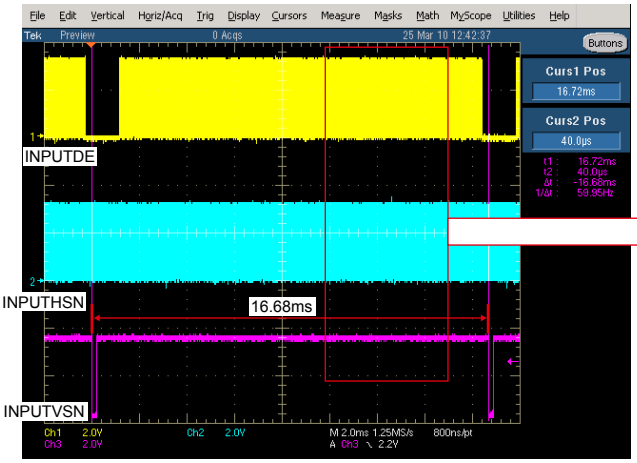

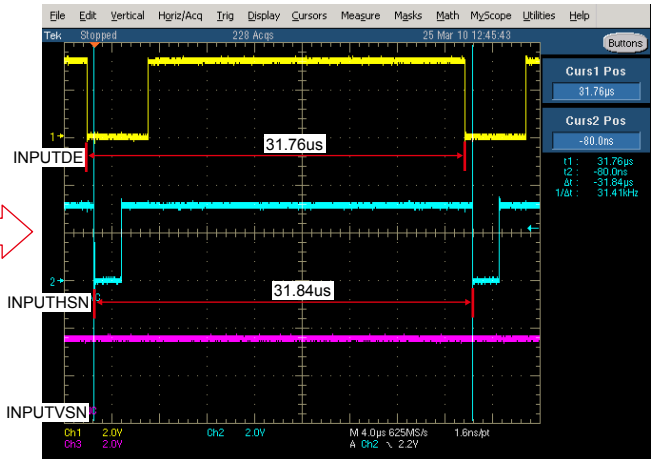

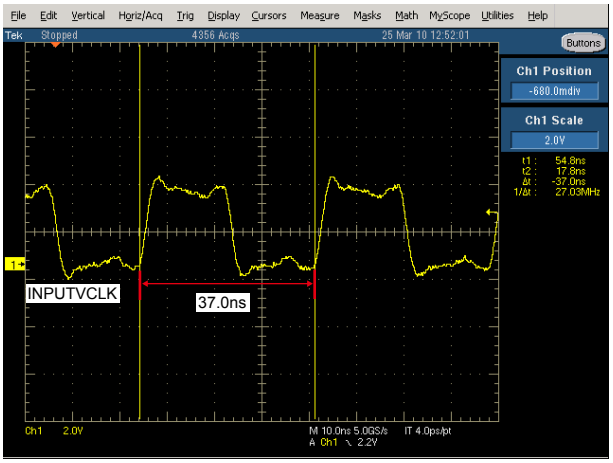

VOUTDE/VOUTVS/VOUTHS/VOUTCLK0 : Check item (22)

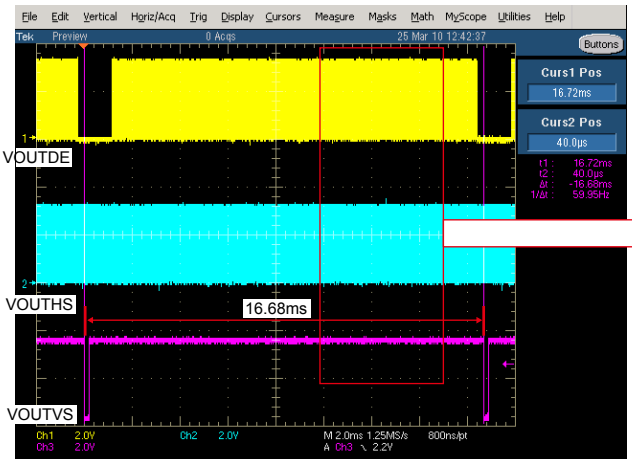

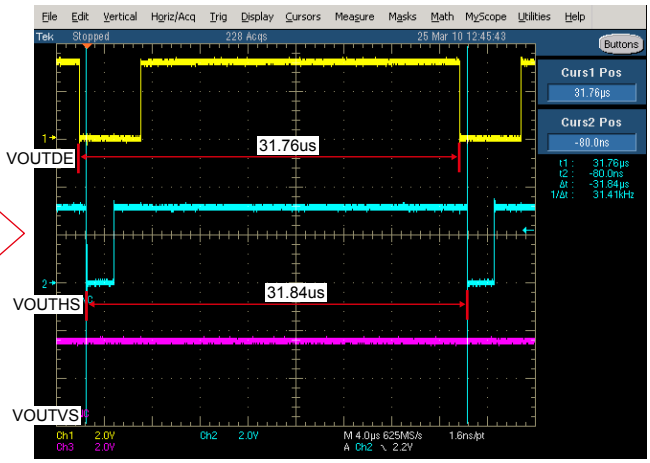

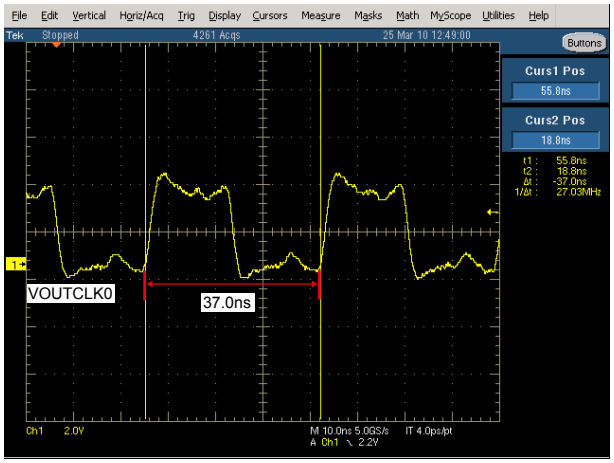

HRDE/HRVSYNC/HRHSYNC/HRPCK : Check item (29)

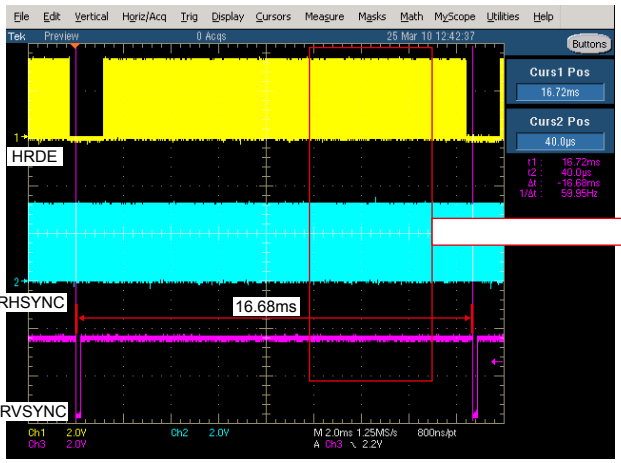

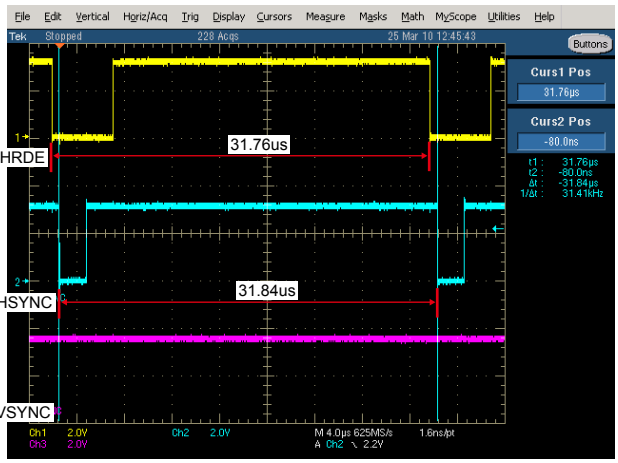

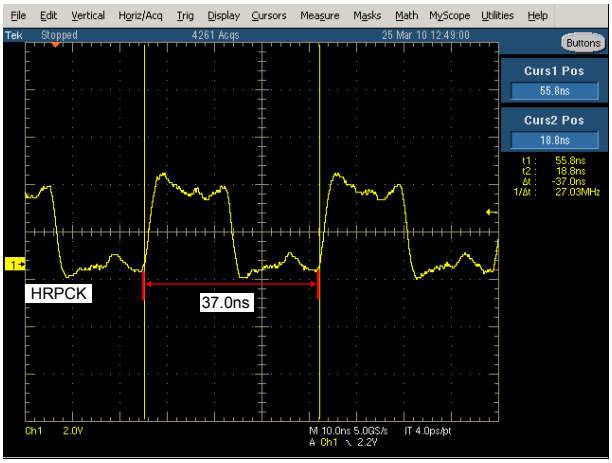

1TXDE/1TXVSYNC/1TXHSYNC/1TXPCK : Check item (32)

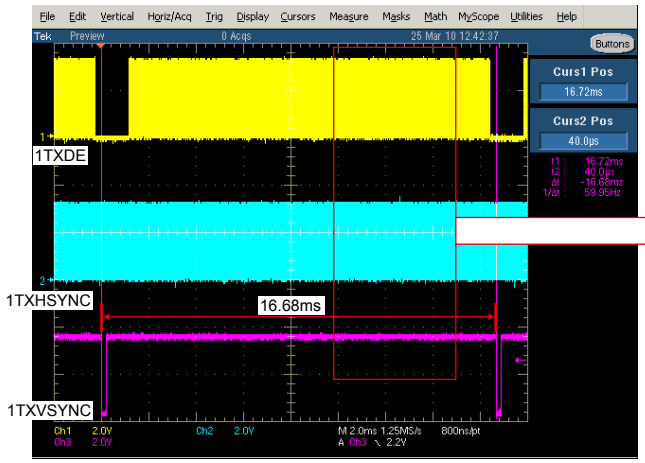

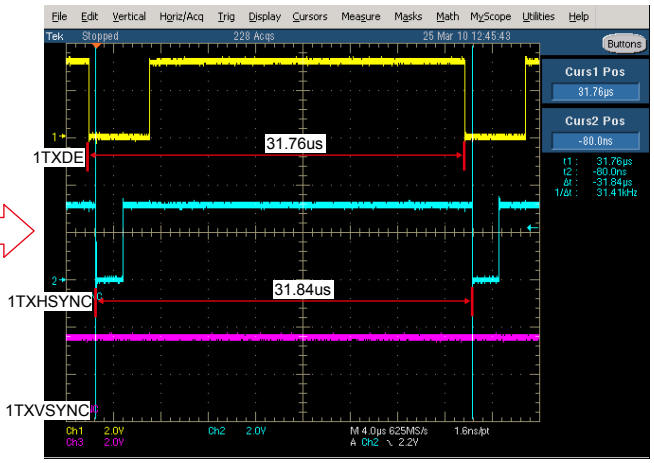

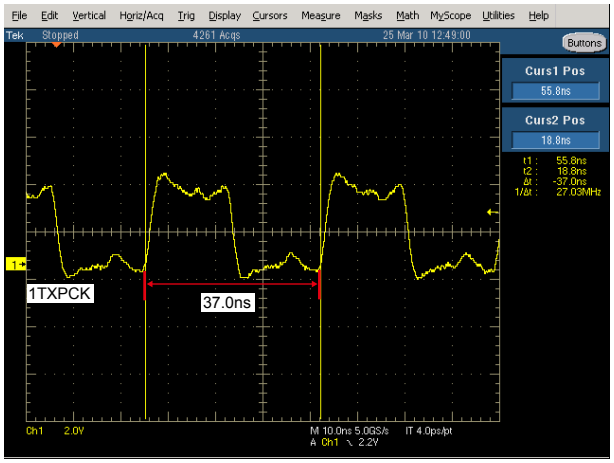

4. AUDIO

4.1. AUDIO CHECK

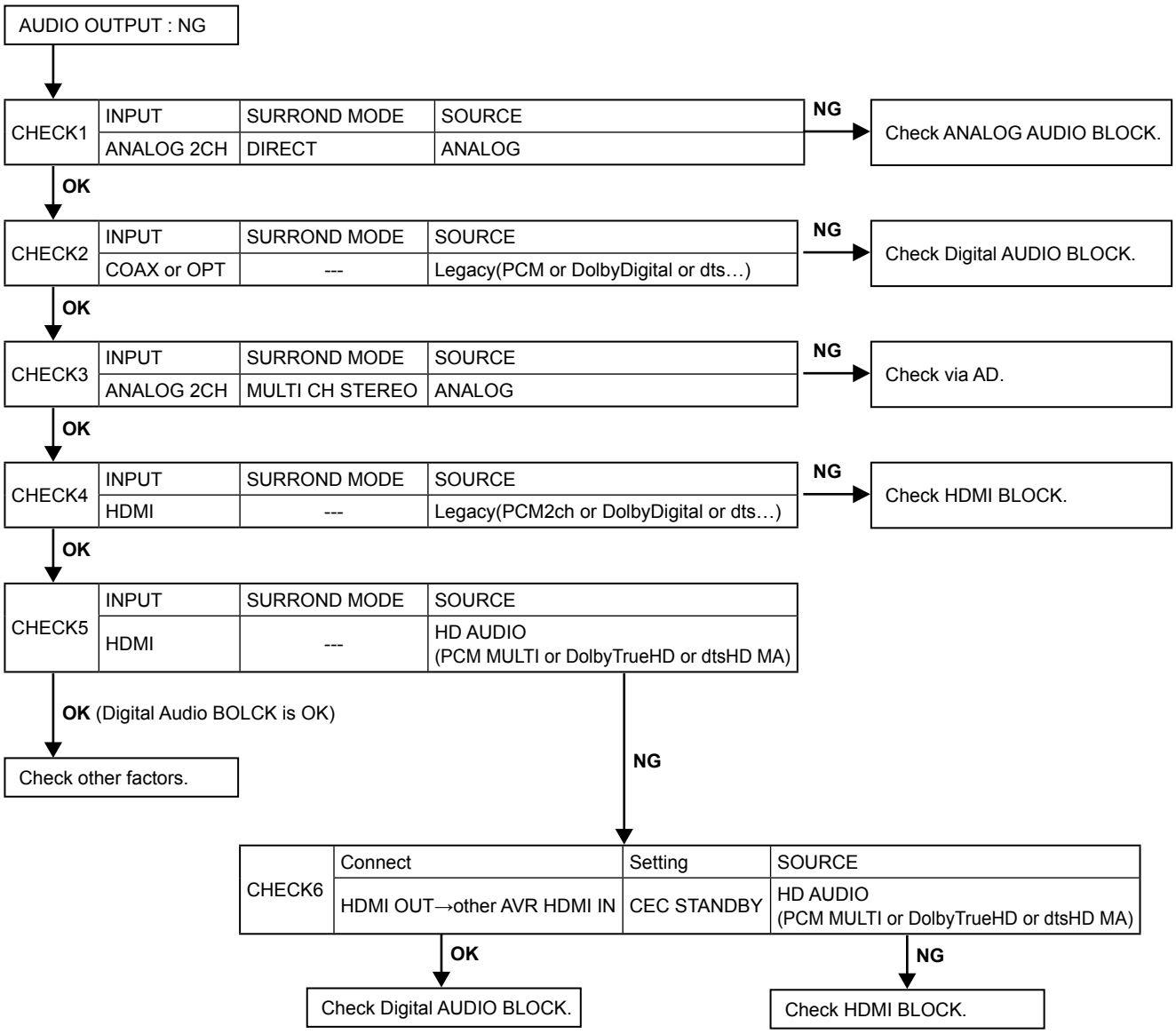

4.2. Analog audio

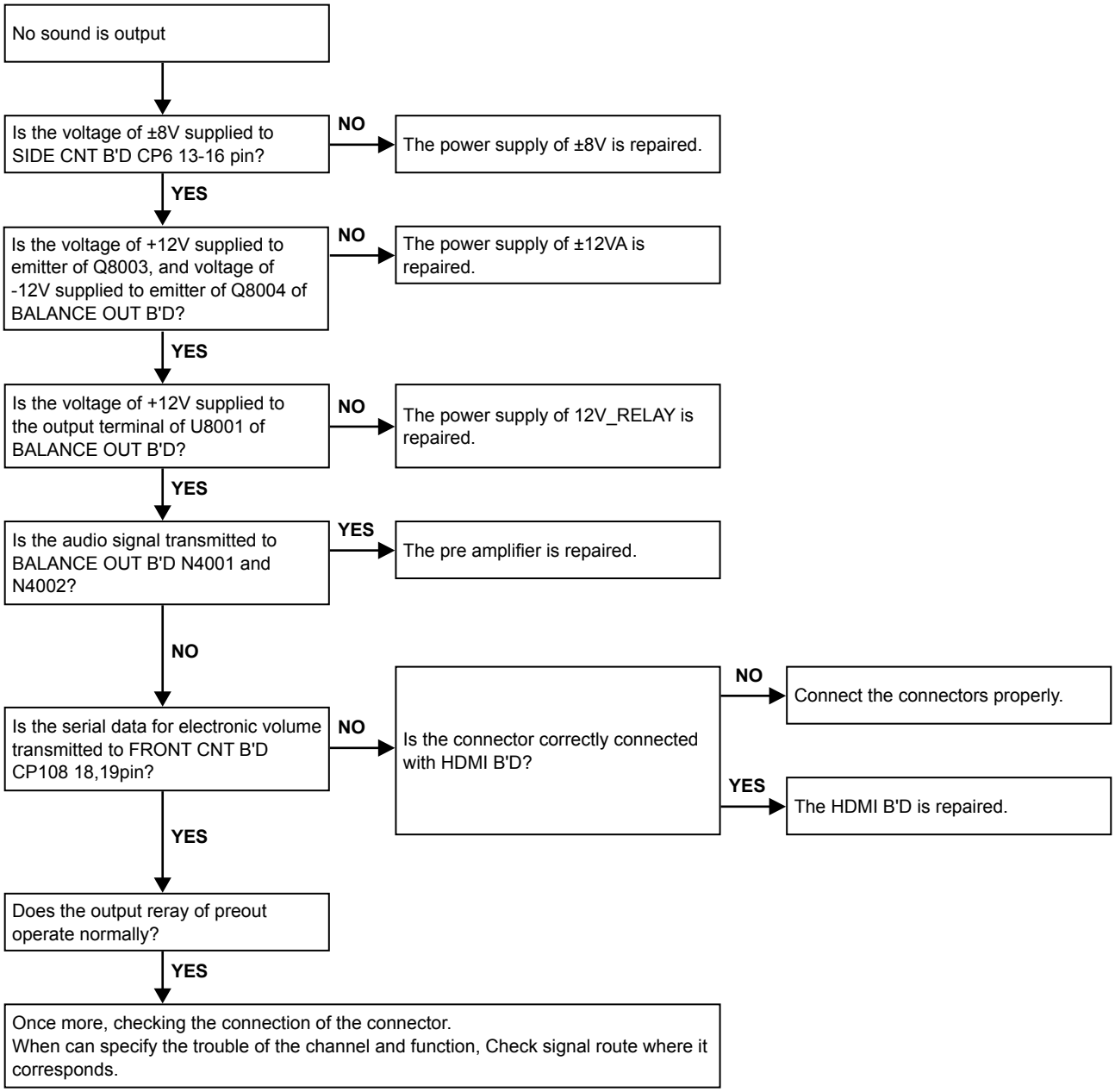

5. Network/USB

5.1. Cannot connect to network

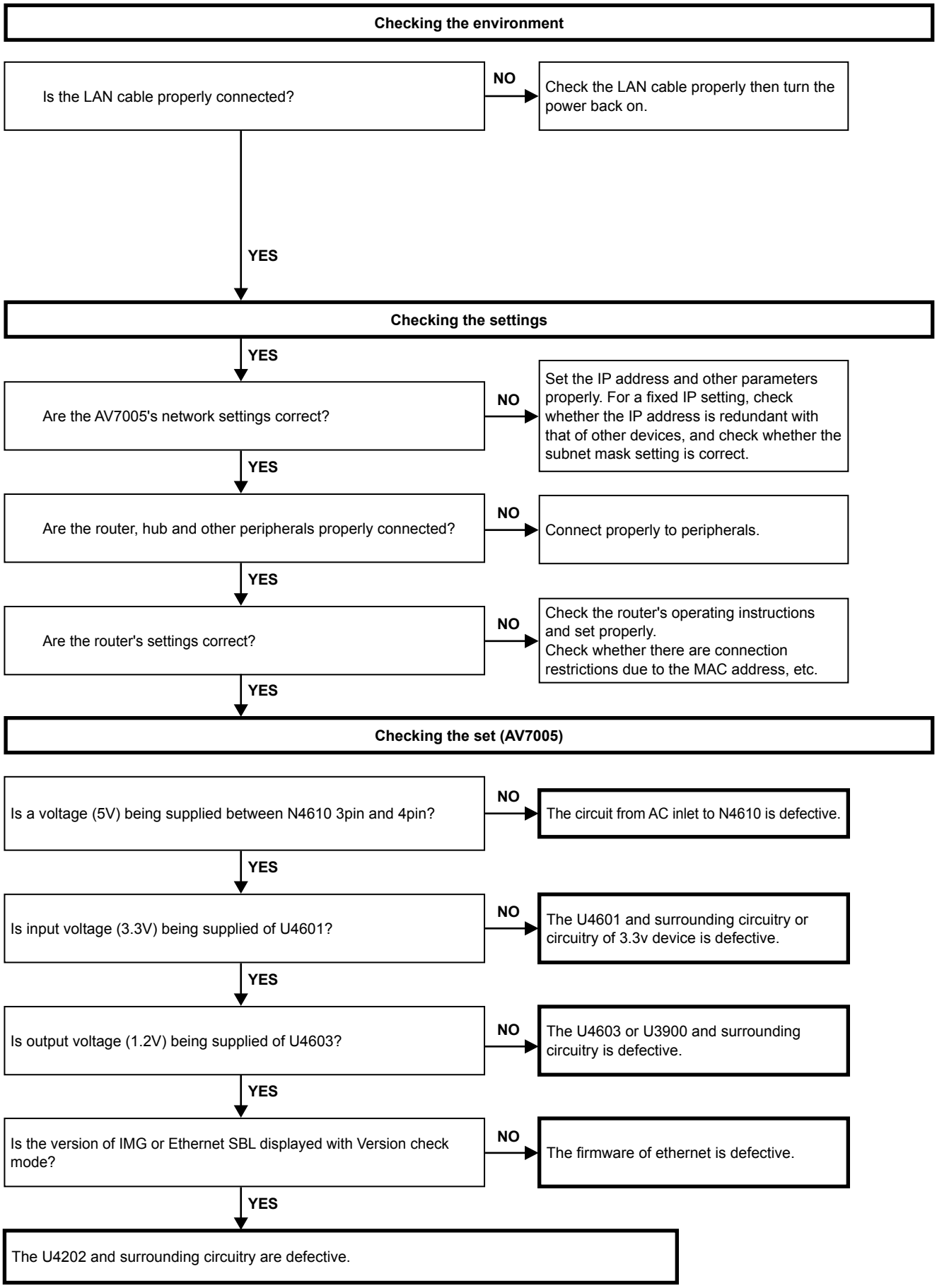

5.2. USB device is not recognized

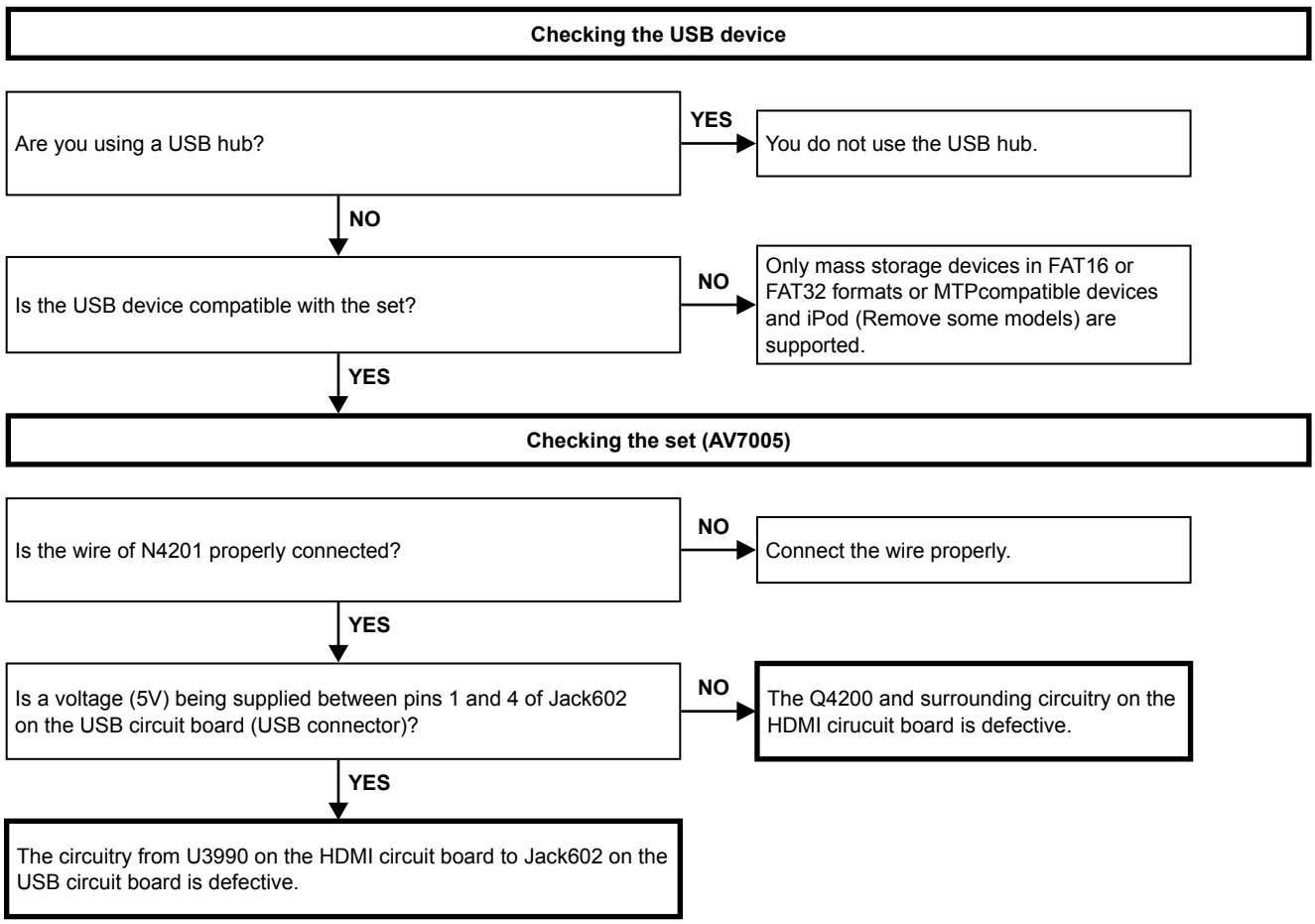

5.3. No picture or sound is output

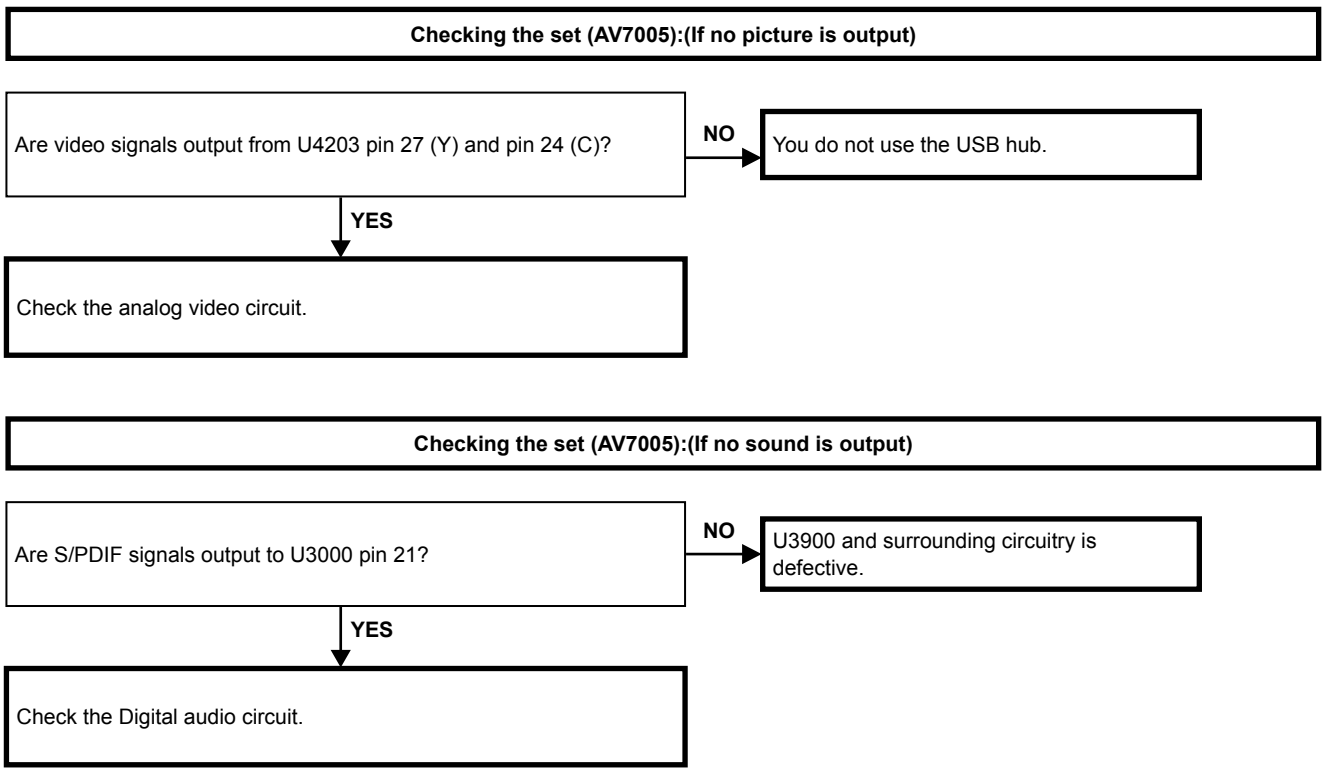

Personal notes:

CLOCK FLOW & WAVE FORM IN DIGITAL BLOCK

Wave form

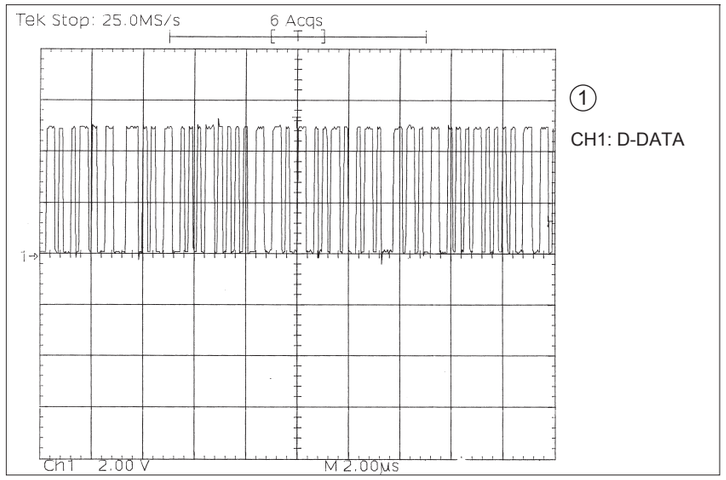

①
CH1: D-DATA

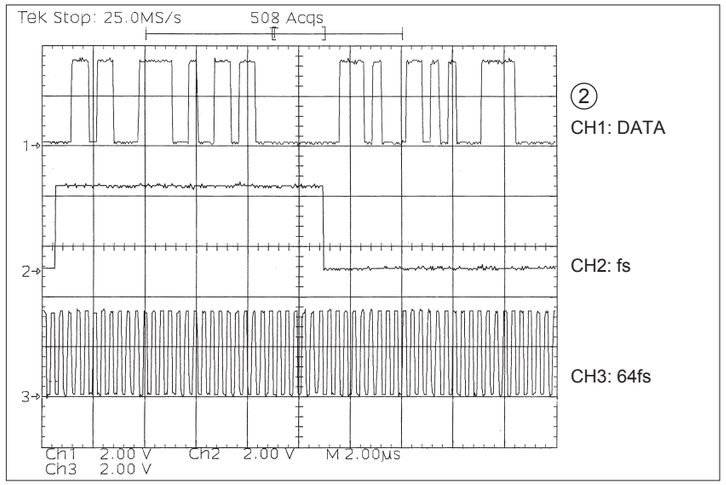

②
CH1: DATA
CH2: fs
CH3: 64fs

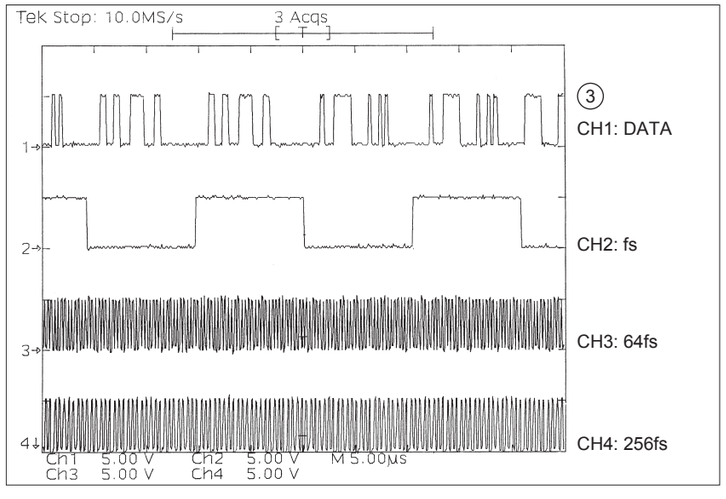

③
CH1: DATA
CH2: fs
CH3: 64fs
CH4: 256fs

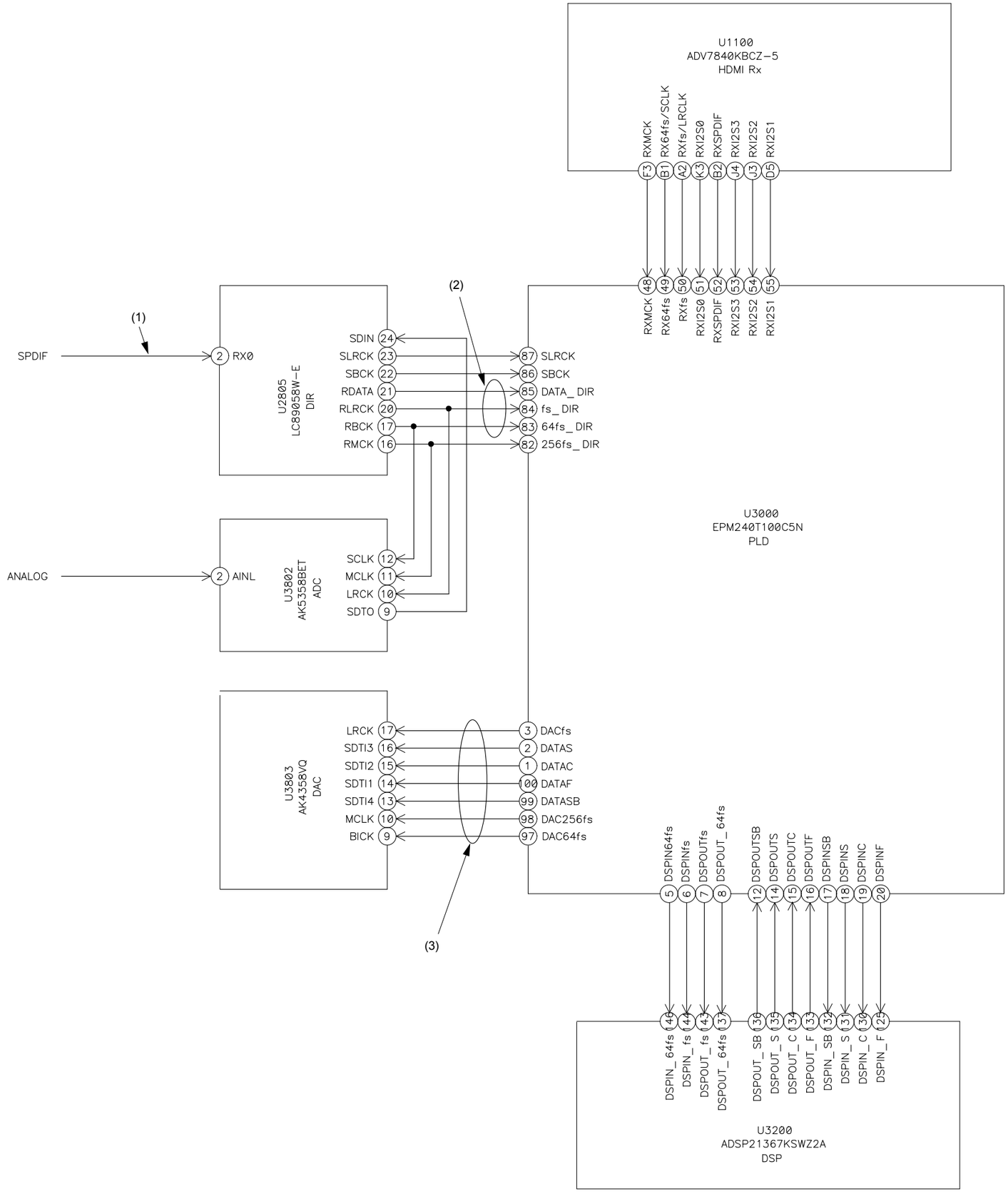

BLOCK DIAGRAM

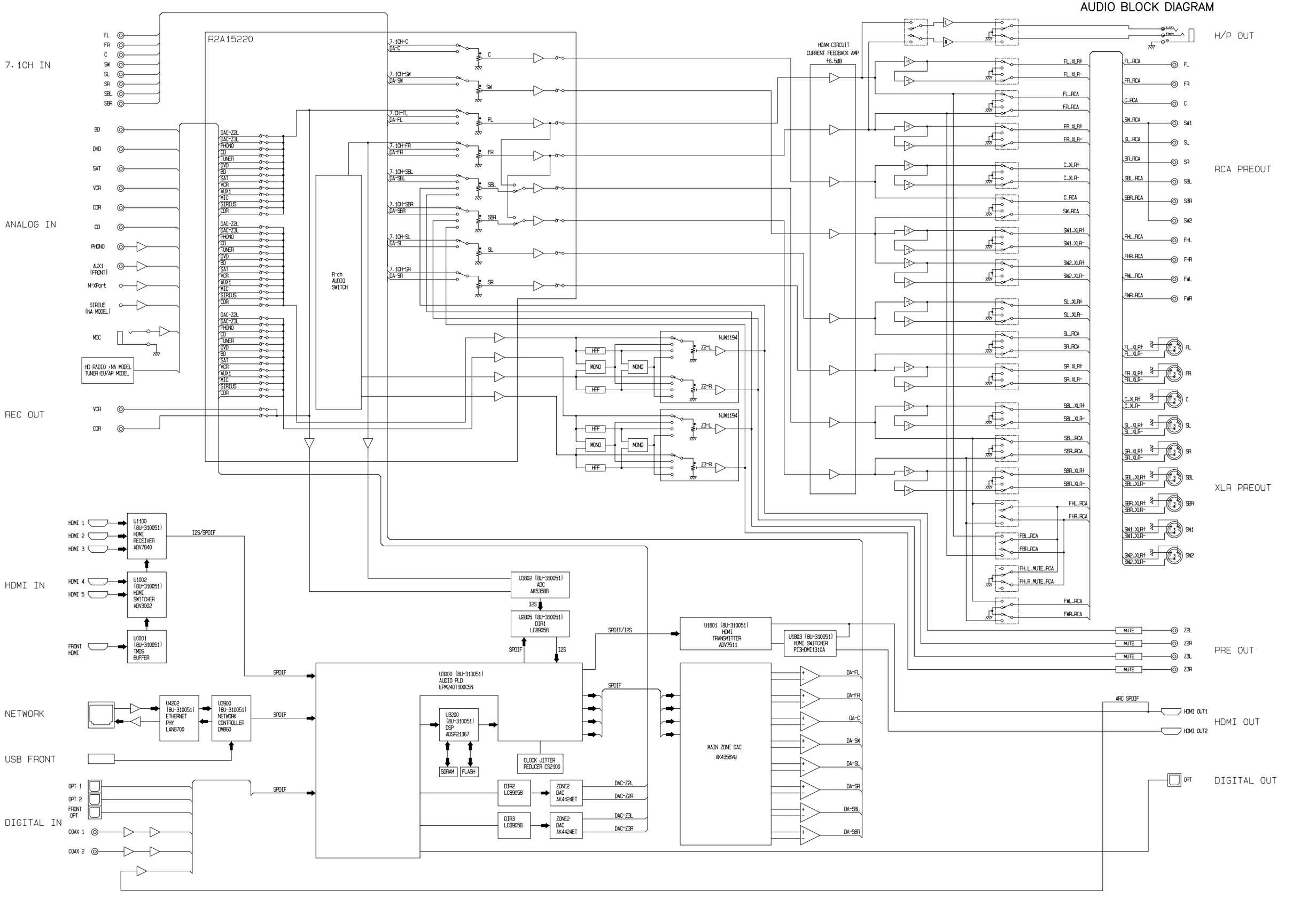

VIDEO BLOCK DIAGRAM

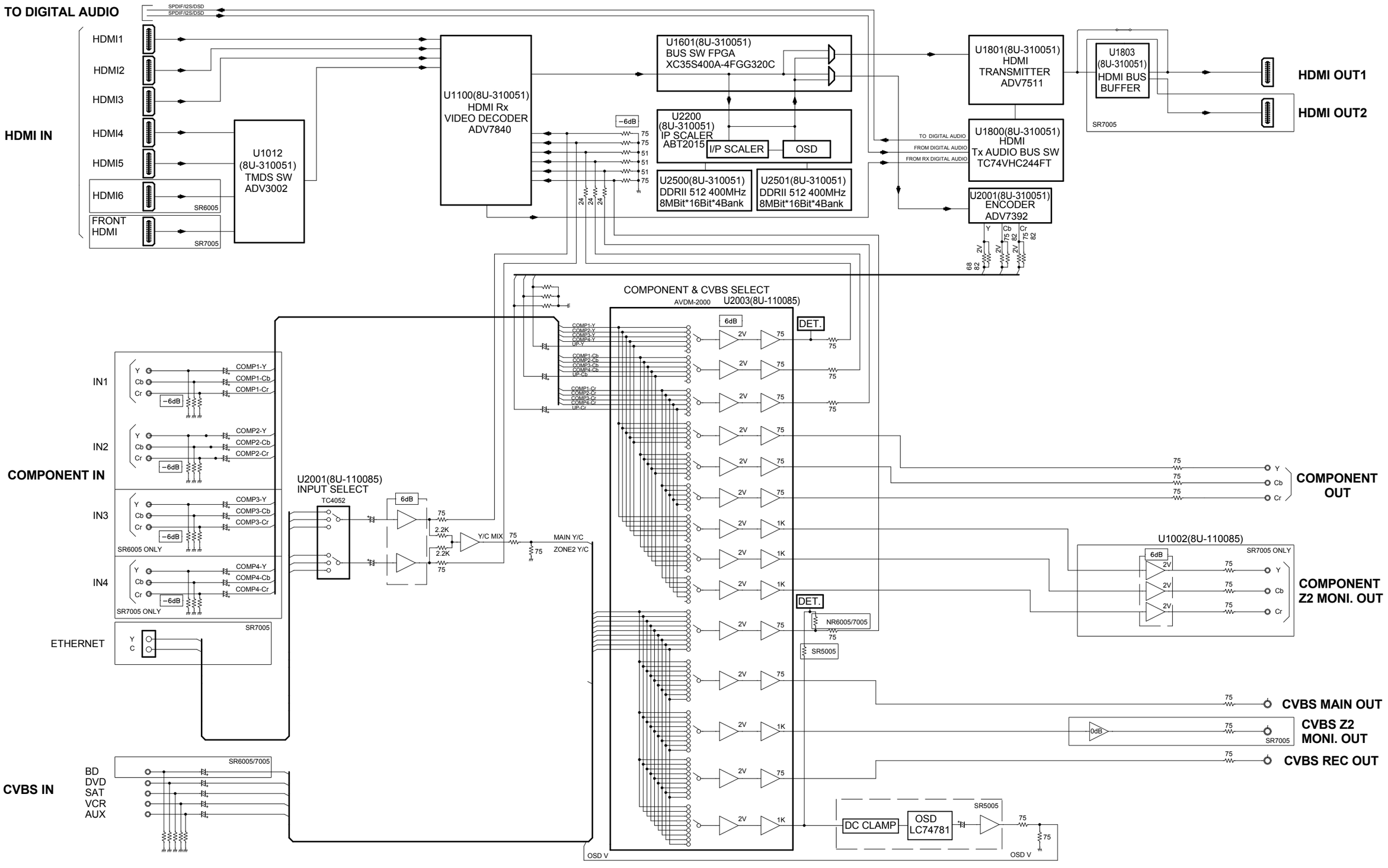

VCC DIAGRAM

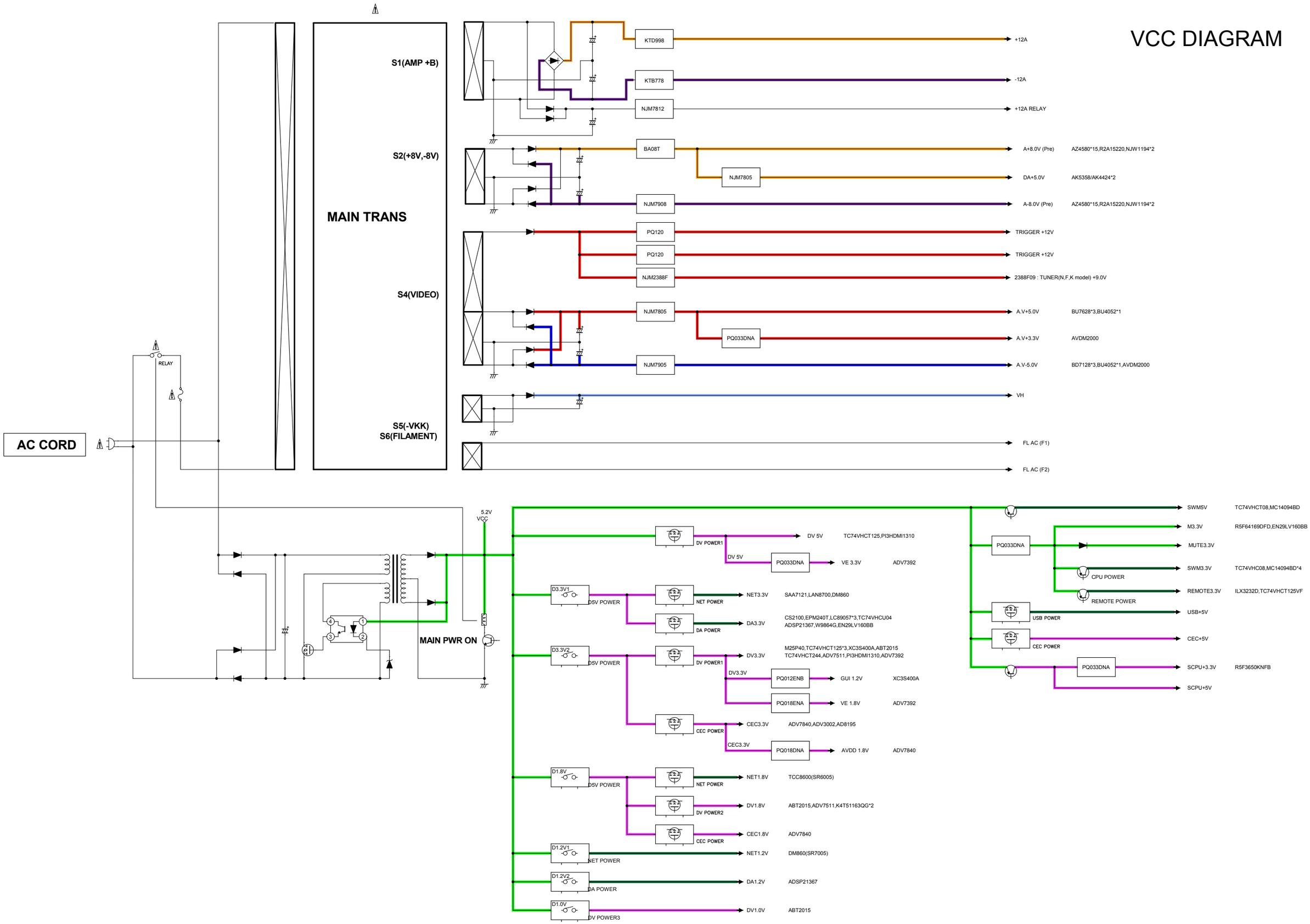
AC CORD
RELAY
S1(AMP +B)
S2(+8V,-8V)
MAIN TRANS
S4(VIDEO)
S5(-VKK)
S6(FILAMENT)
KTD998
KTB778
NJM7812
+12A
-12A
+12A RELAY
BA08T
NJM7805
NJM7908
A+8.0V (Pre)
AZ4580*15,R2A15220,NJW1194*2
DA+5.0V
AK5358/AK4424*2
A-8.0V (Pre)
AZ4580*15,R2A15220,NJW1194*2
PQ120
PQ120
NJM2388F
TRIGGER +12V
TRIGGER +12V
2388F09 : TUNER(N,F,K model) +9.0V
NJM7805
PQ033DNA
NJM7905
A.V+5.0V
BU7628*3,BU4052*1
A.V+3.3V
AVDM2000
A.V-5.0V
BD7128*3,BU4052*1,AVDM2000
VH
FL AC (F1)
FL AC (F2)
5.2V
VCC
MAIN PWR ON
DV POWER1
DV 5V
TC74VHCT125,PI3HDMI1310
PQ033DNA
VE 3.3V
ADV7392
D3.3V1
D5V POWER
NET POWER
NET3.3V
SAA7121,LAN8700,DM860
DA POWER
DA3.3V
CS2100,EPM240T,LC89057*3,TC74VHCU04
ADSP21367,W9864G,EN29LV160BB
D3.3V2
DV3.3V
M25P40,TC74VHCT125*3,XC3S400A,ABT2015
TC74VHCT244,ADV7511,PI3HDMI1310,ADV7392
PQ012ENB
GUI 1.2V
XC3S400A
PQ018ENA
VE 1.8V
ADV7392
CEC POWER
CEC3.3V
ADV7840,ADV3002,AD8195
PQ018DNA
AVDD 1.8V
ADV7840
D1.8V
NET1.8V
TCC8600(SR6005)
DV POWER2
DV1.8V
ABT2015,ADV7511,K4T51163QG*2
CEC1.8V
ADV7840
D1.2V1
NET1.2V
DM860(SR7005)
D1.2V2
DA1.2V
ADSP21367
D1.0V
DV POWER3
DV1.0V
ABT2015
SWM5V
TC74VHCT08,MC14094BD
M3.3V
R5F64169DFD,EN29LV160BB
MUTE3.3V
SWM3.3V
TC74VHC08,MC14094BD*4
CPU POWER
REMOTE3.3V
ILX3232D,TC74VHCT125VF
REMOTE POWER
USB POWER
USB+5V
CEC+5V
SCPU+3.3V
R5F3650KNFB
SCPU+5V

LEVEL DIAGRAM

LEVEL DIAGRAM
FRONT ch

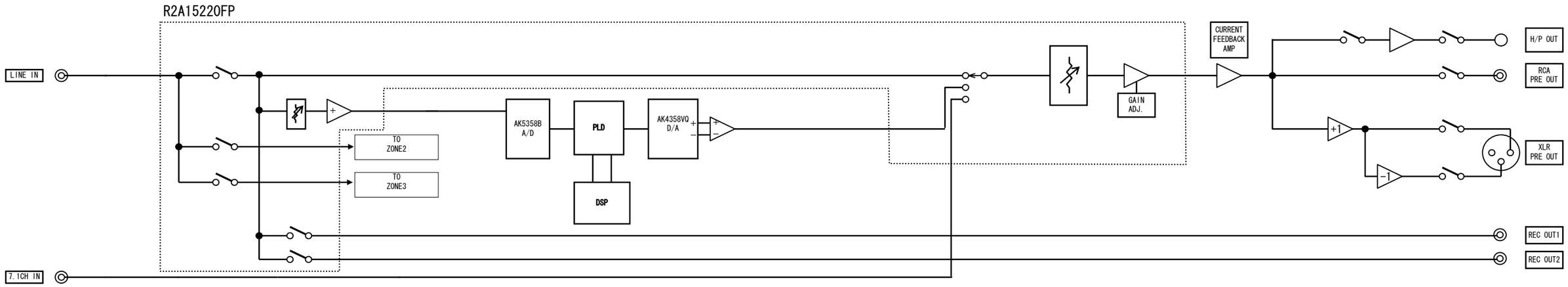

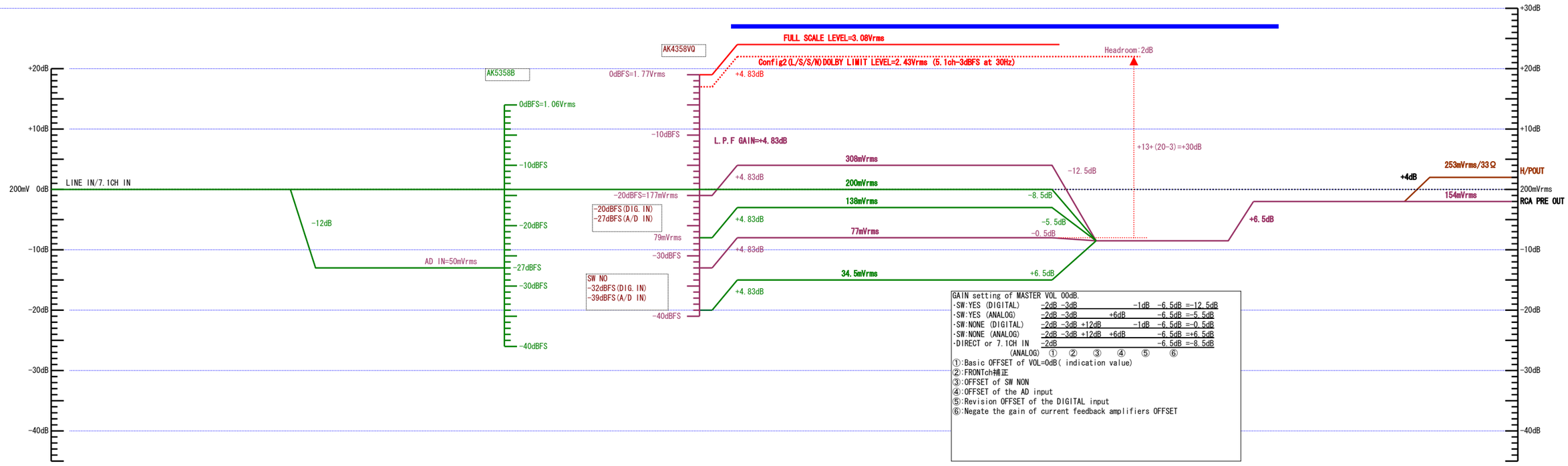

LEVEL DIAGRAM
CENTER ch

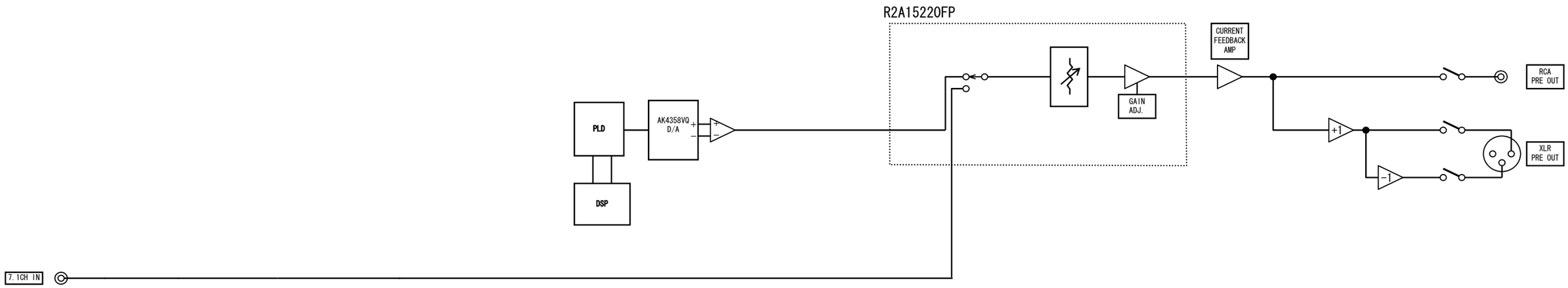

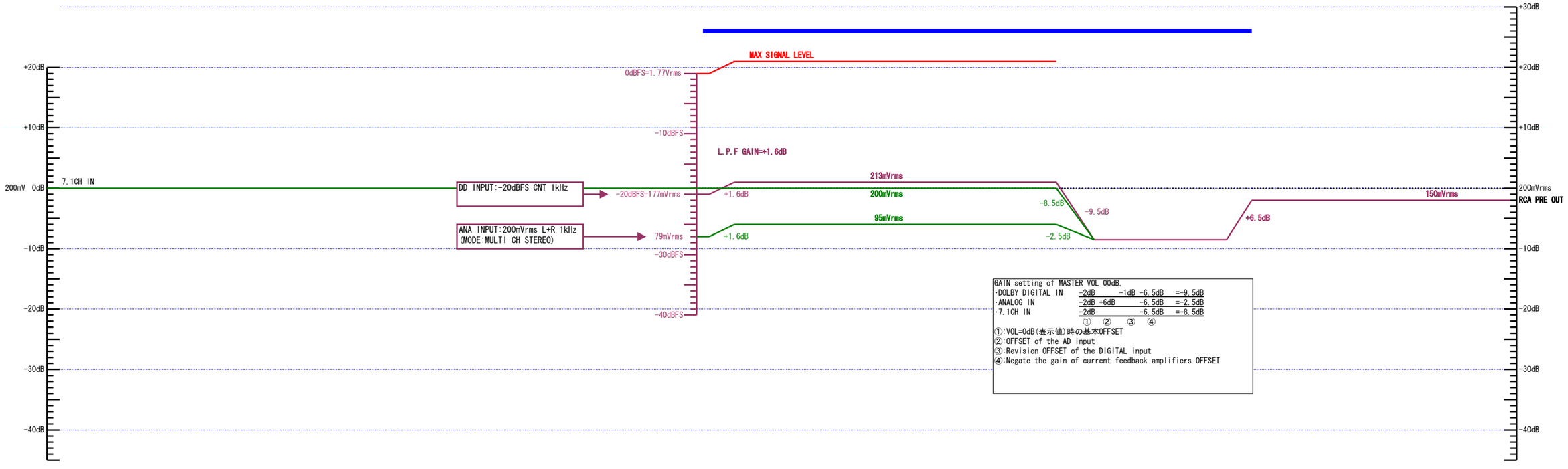

LEVEL DIAGRAM
SUBWOOFER ch

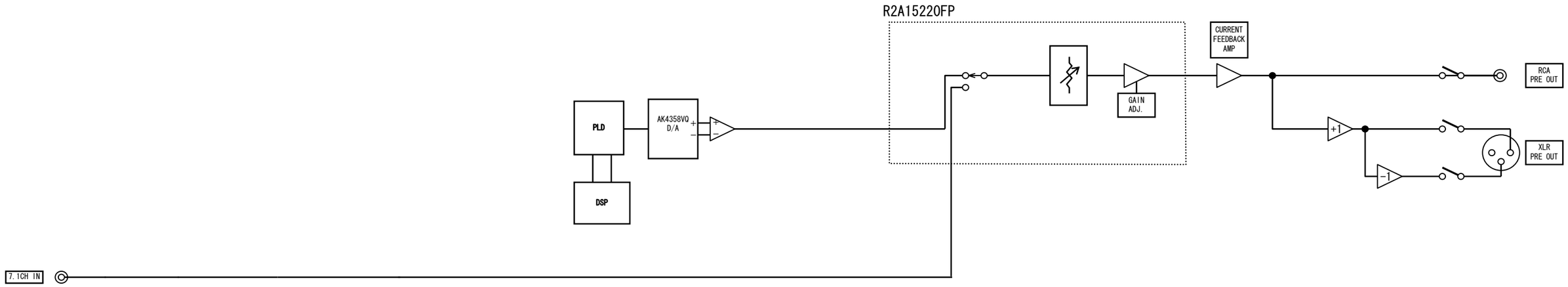

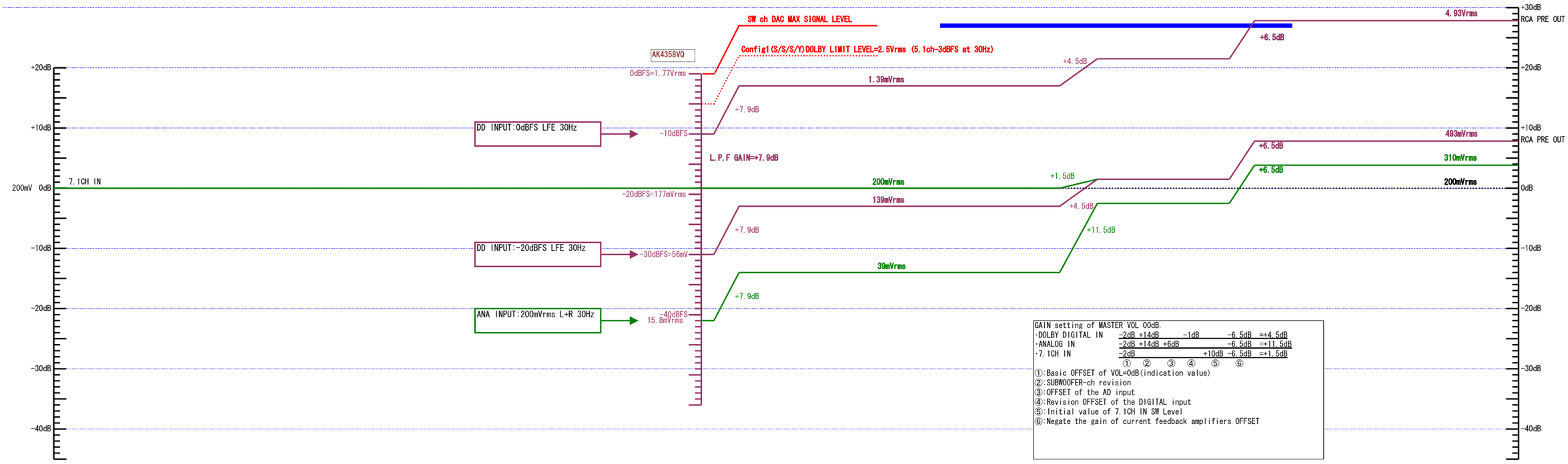

LEVEL DIAGRAM
SURROUND ch

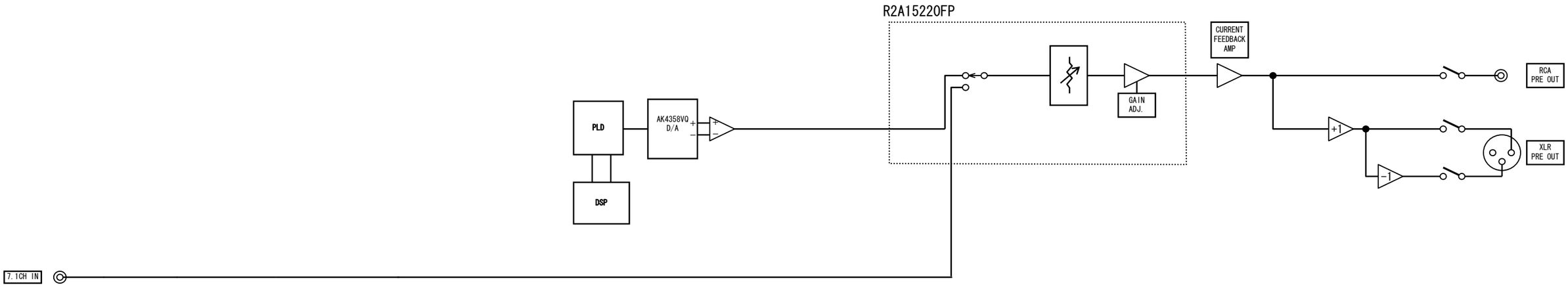

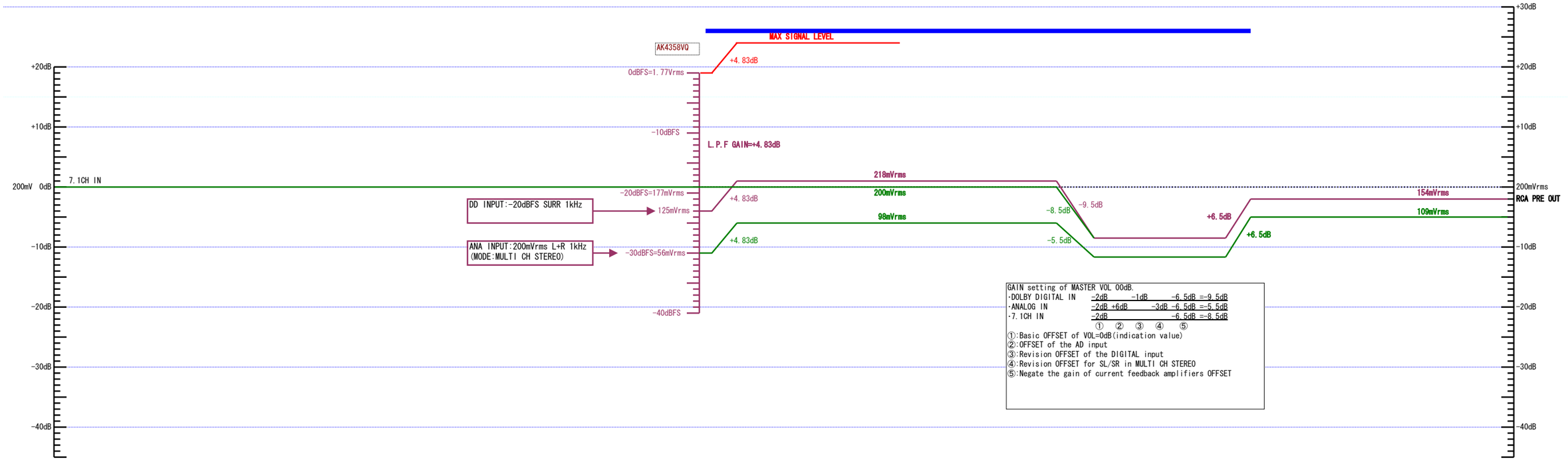

LEVEL DIAGRAM
SURR.BACK ch

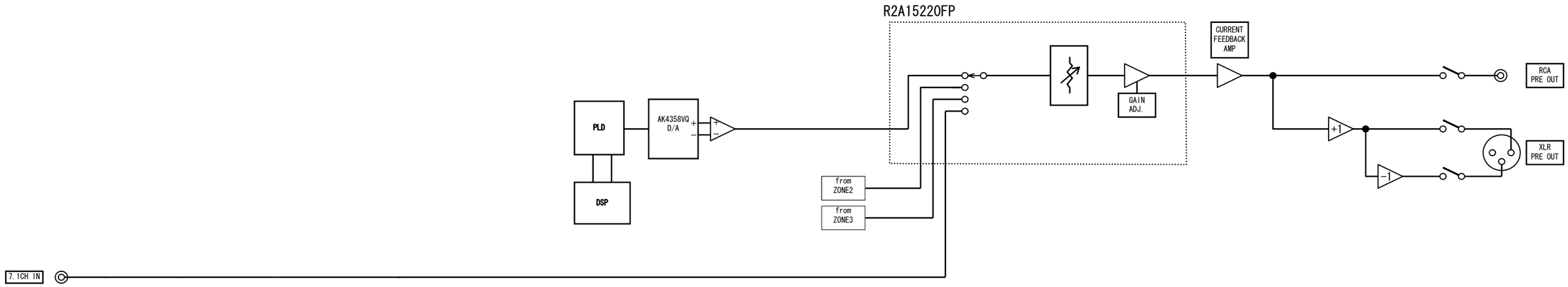

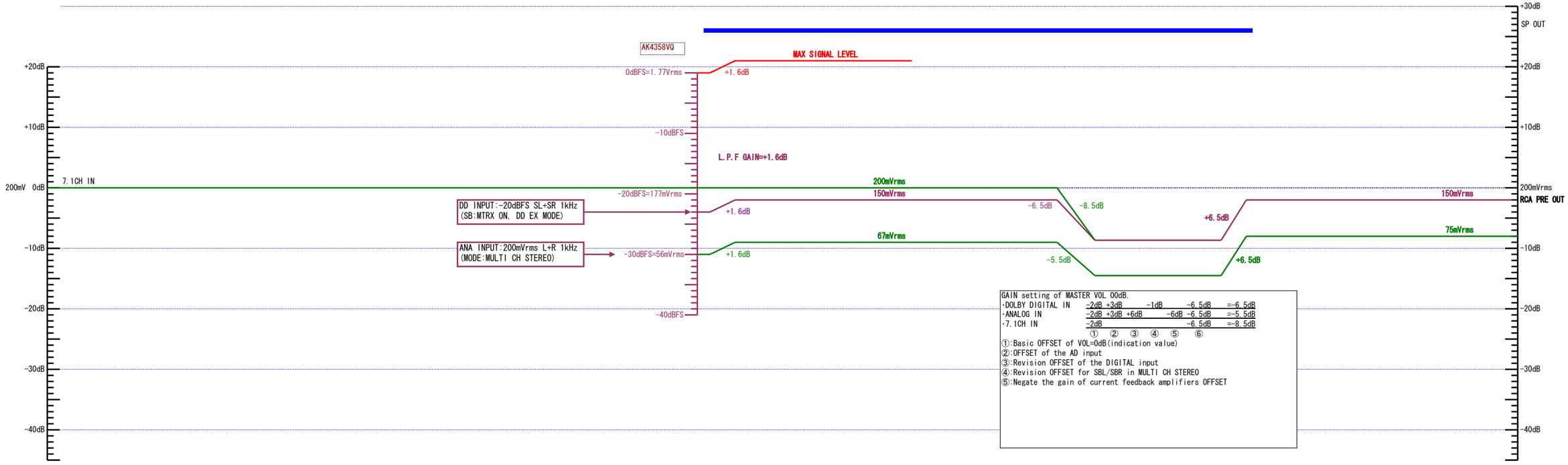

AV7005
LEVEL DIAGRAM
ZONE2/3

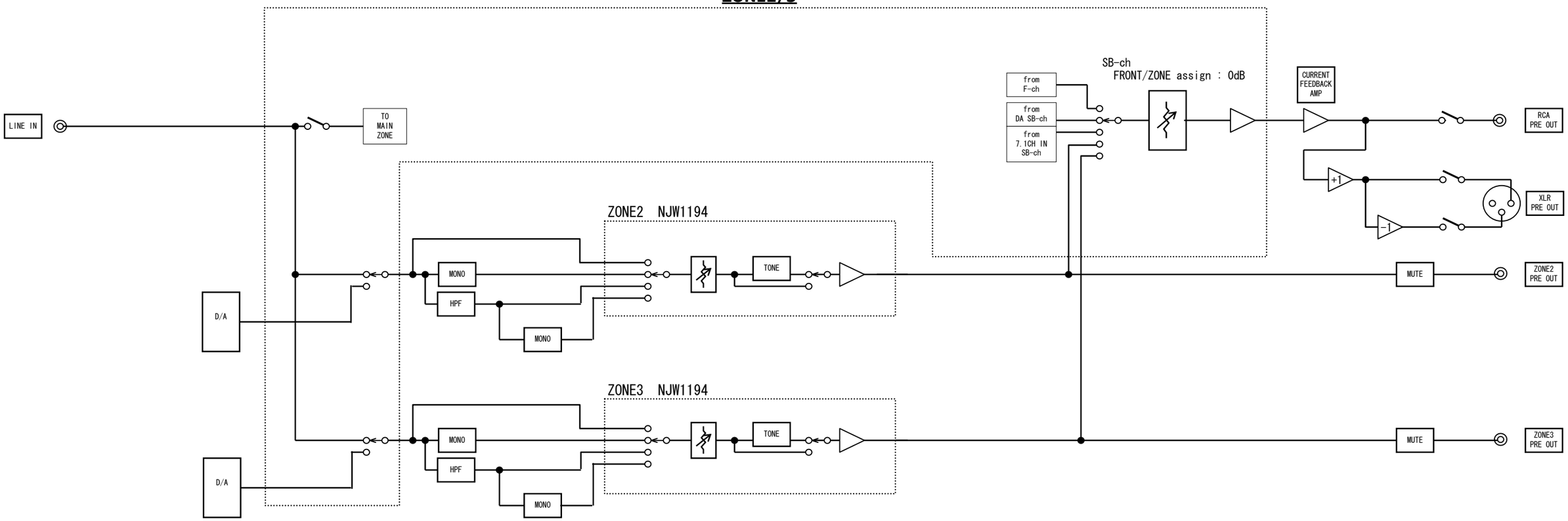

PRINTED WIRING BOARDS

SMPS (COMPONENT SIDE)

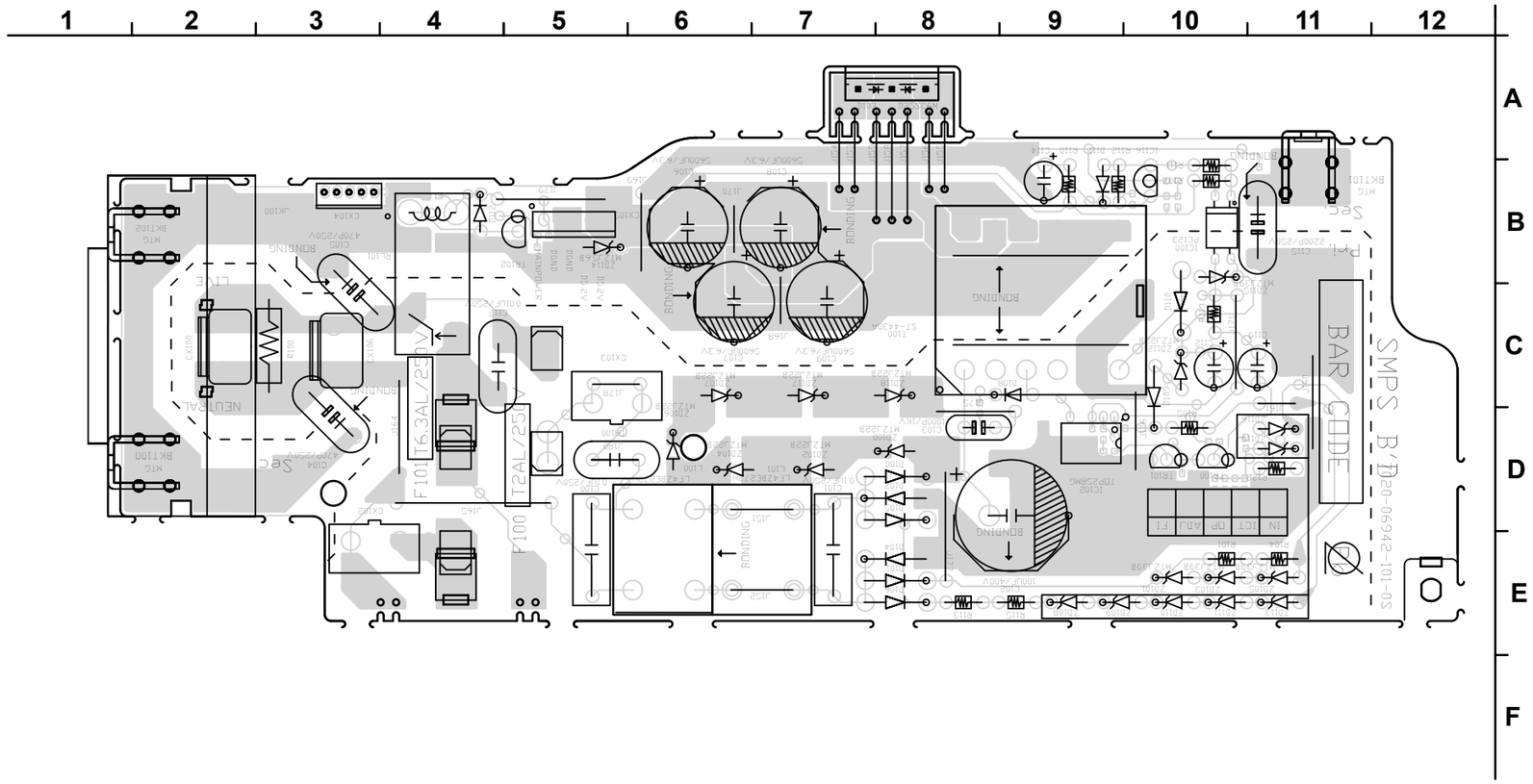

SMPS (FOIL SIDE)

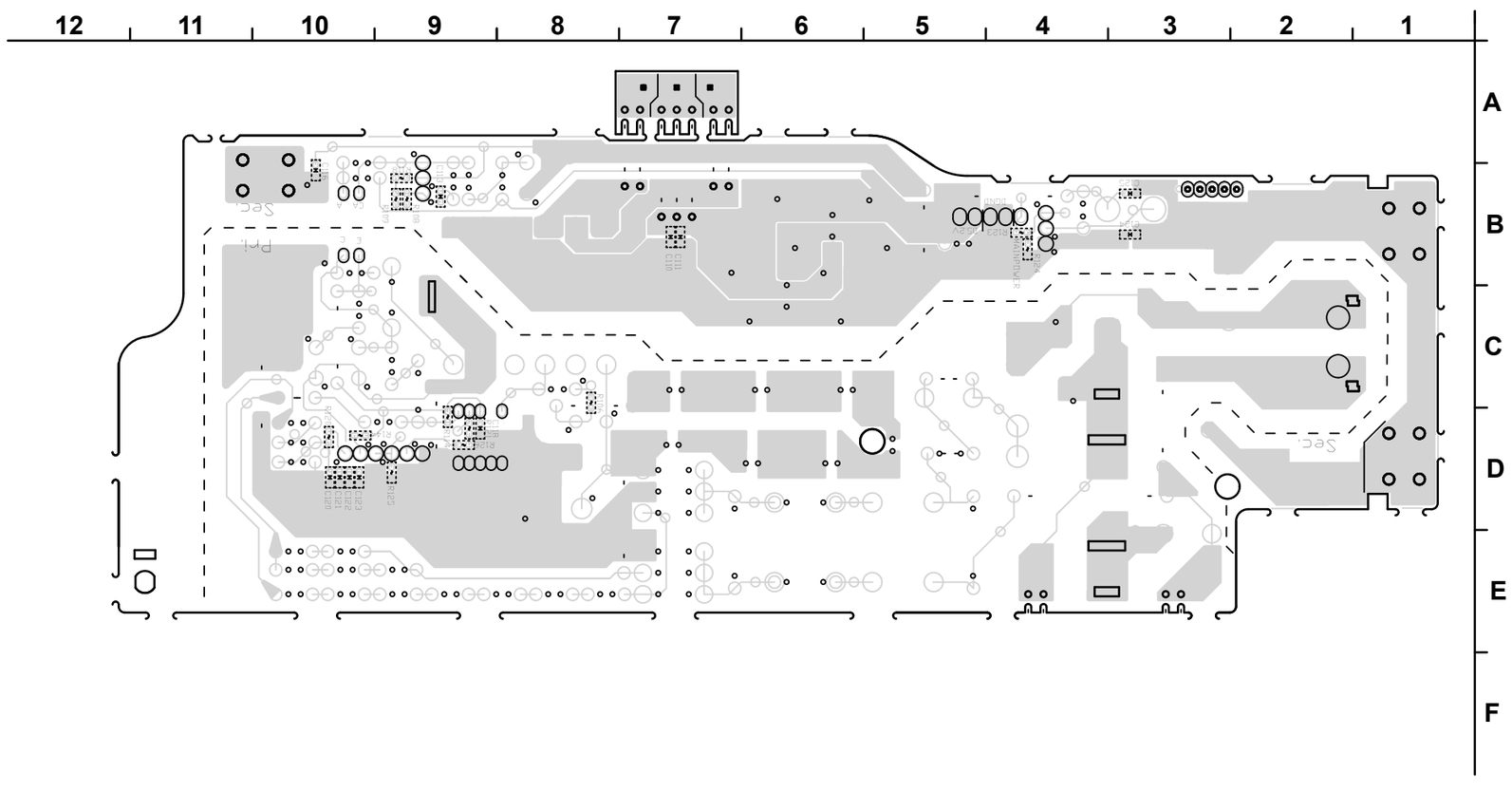

鉛フリー半田
半田付けには、鉛フリー半田 (Sn-Ag-Cu) を使用してください。

Lead-free Solder
When soldering, use the Lead-free Solder (Sn-Ag-Cu).

REG (COMPONENT SIDE)

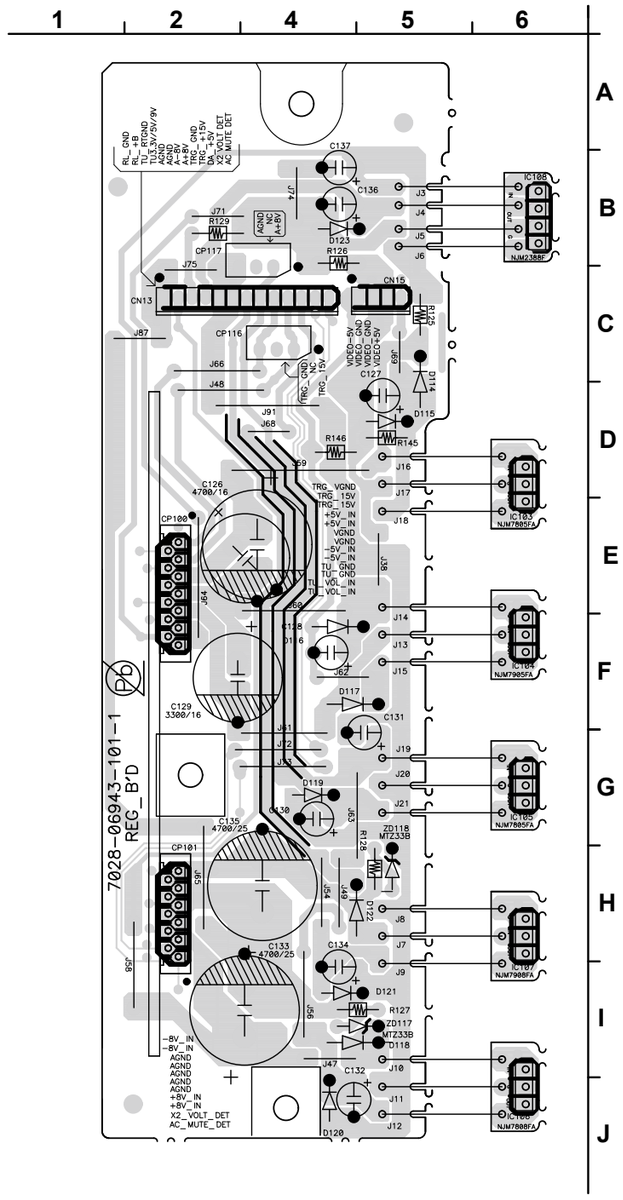

FRONT_CNT (COMPONENT SIDE)

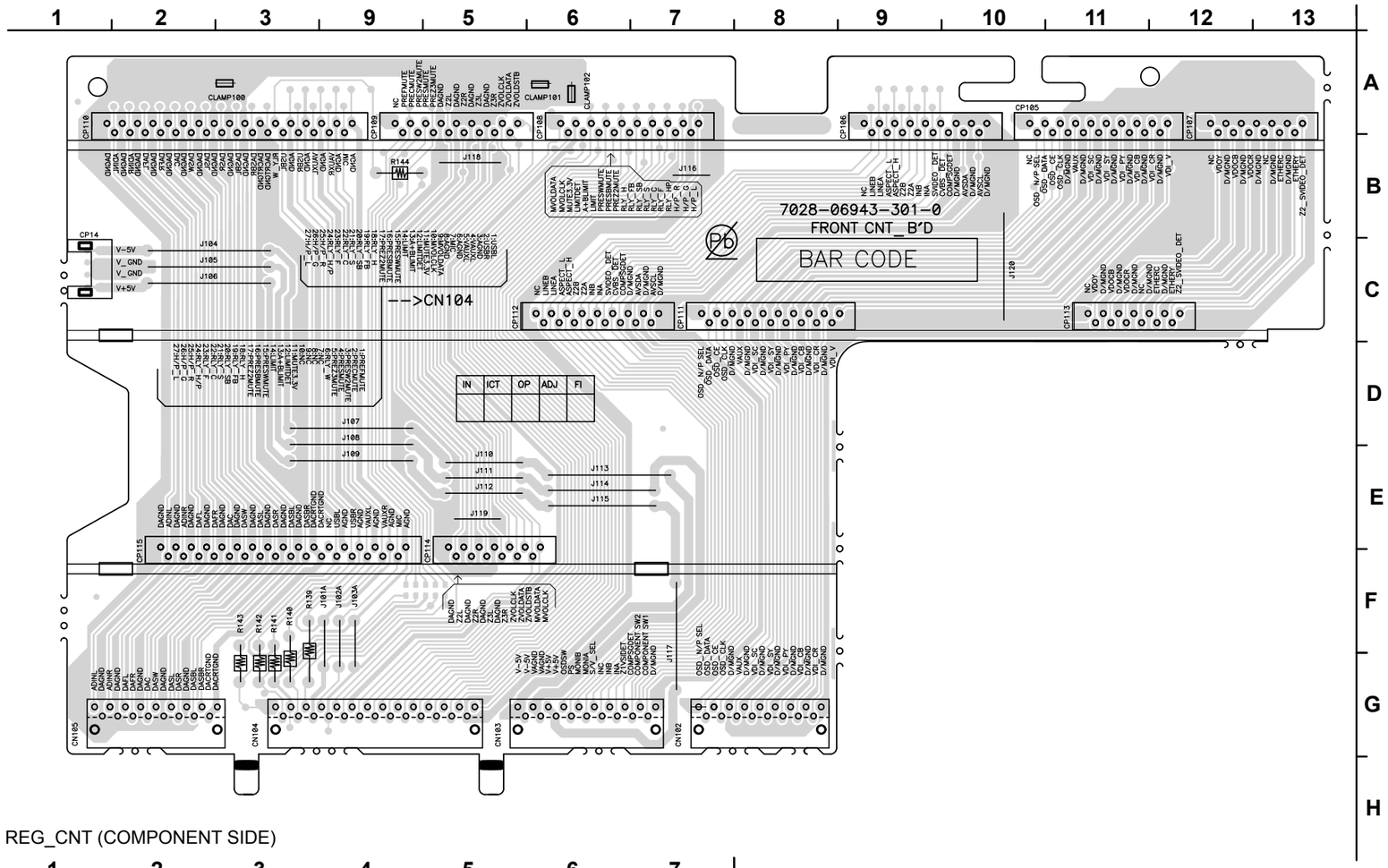

REG_CNT (COMPONENT SIDE)

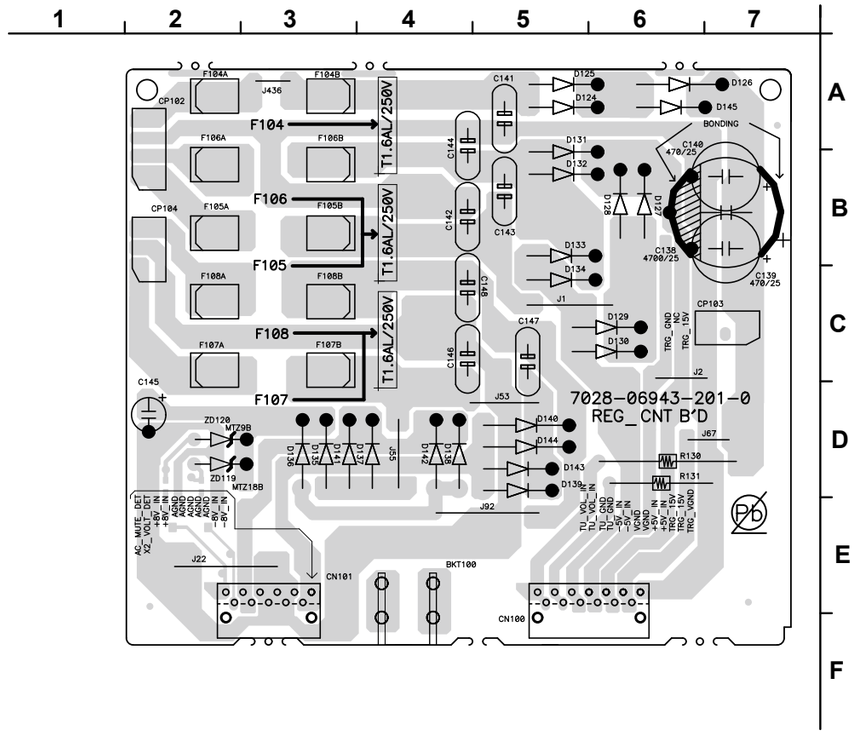

RS232C (COMPONENT SIDE)

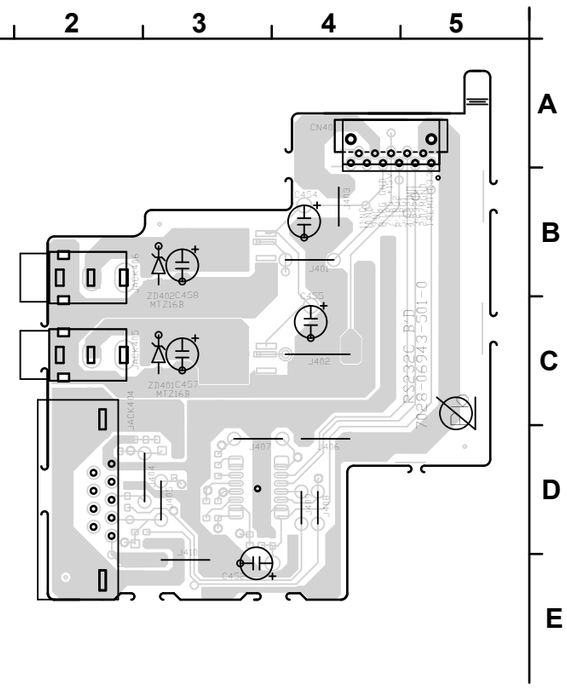

鉛フリー半田
半田付けには、鉛フリー半田 (Sn-Ag-Cu) を使用してください。

Lead-free Solder
When soldering, use the Lead-free Solder (Sn-Ag-Cu).

REG (FOIL SIDE)

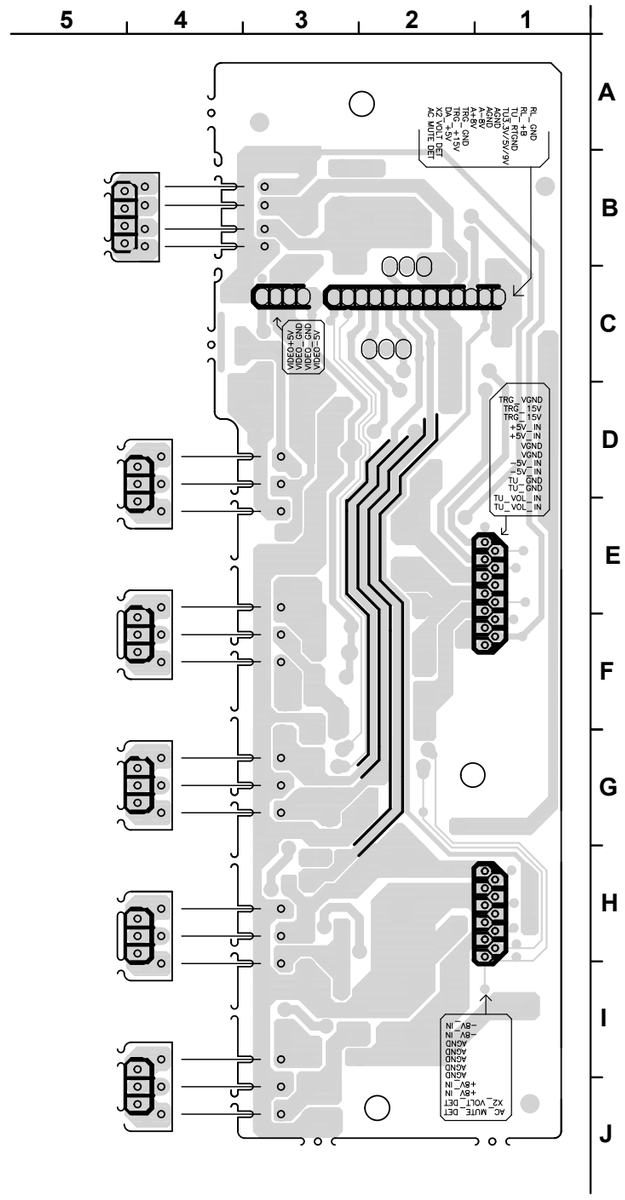

FRONT_CNT (FOIL SIDE)

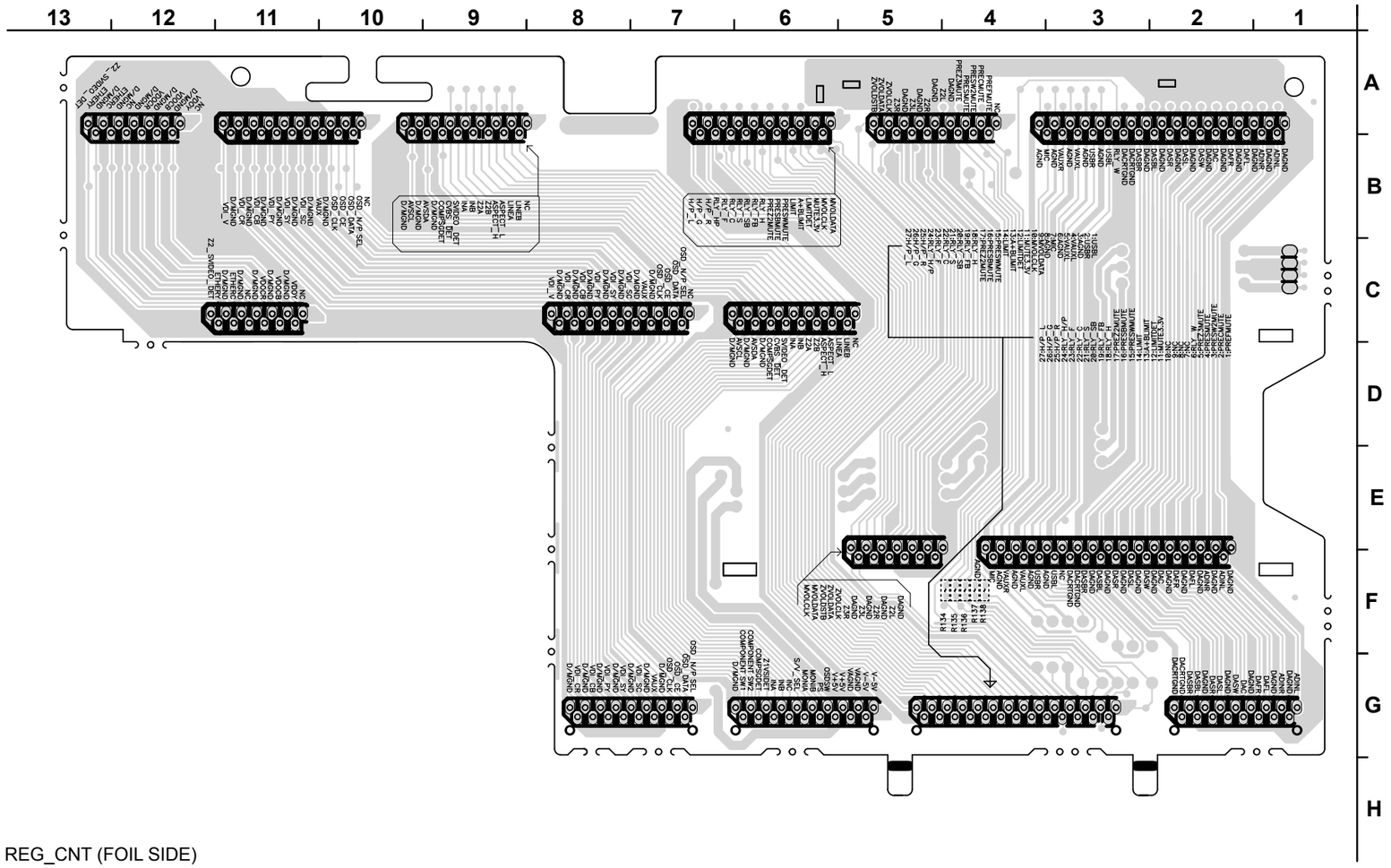

REG_CNT (FOIL SIDE)

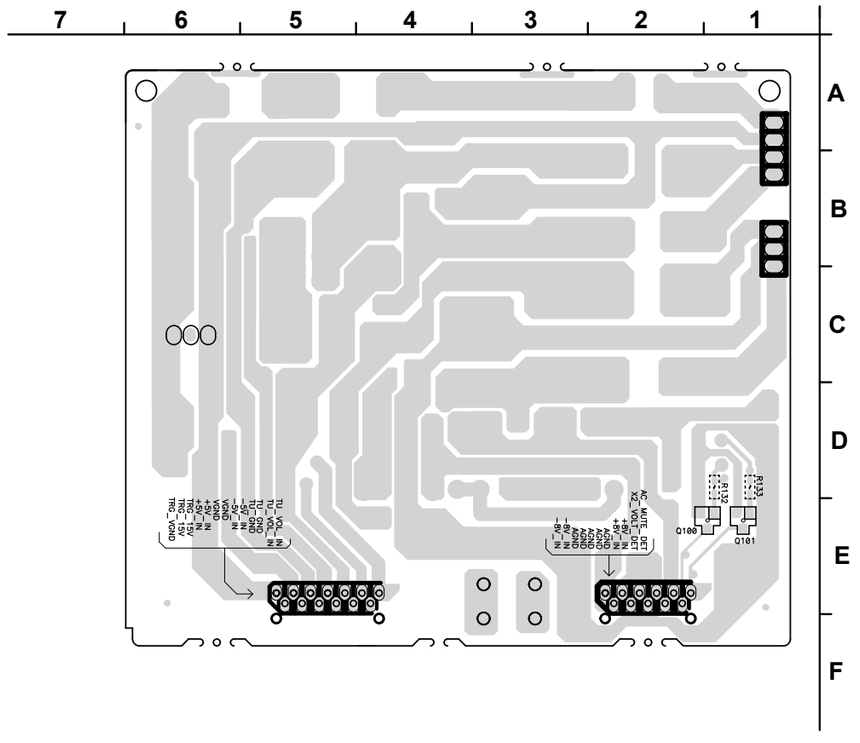

RS232C (FOIL SIDE)

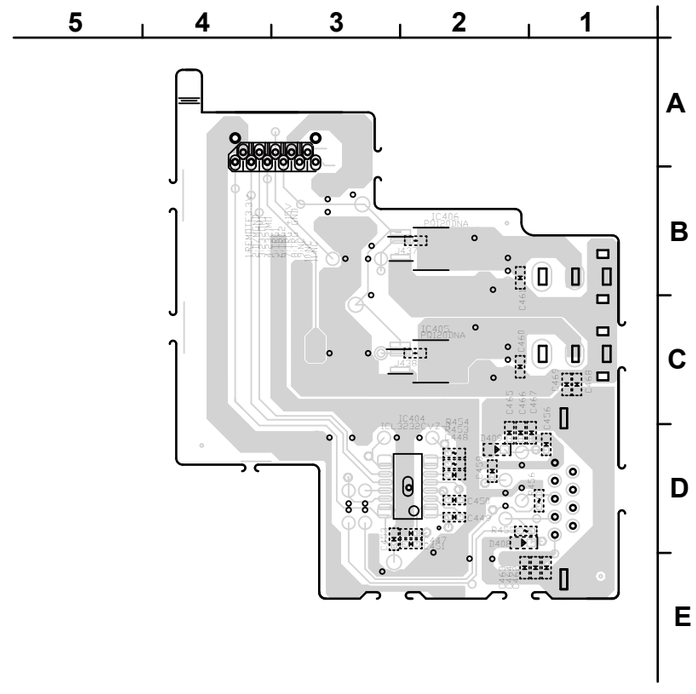

鉛フリー半田
半田付けには、鉛フリー半田 (Sn-Ag-Cu) を使用してください。

Lead-free Solder
When soldering, use the Lead-free Solder (Sn-Ag-Cu).

SIDE_CNT (COMPONENT SIDE)

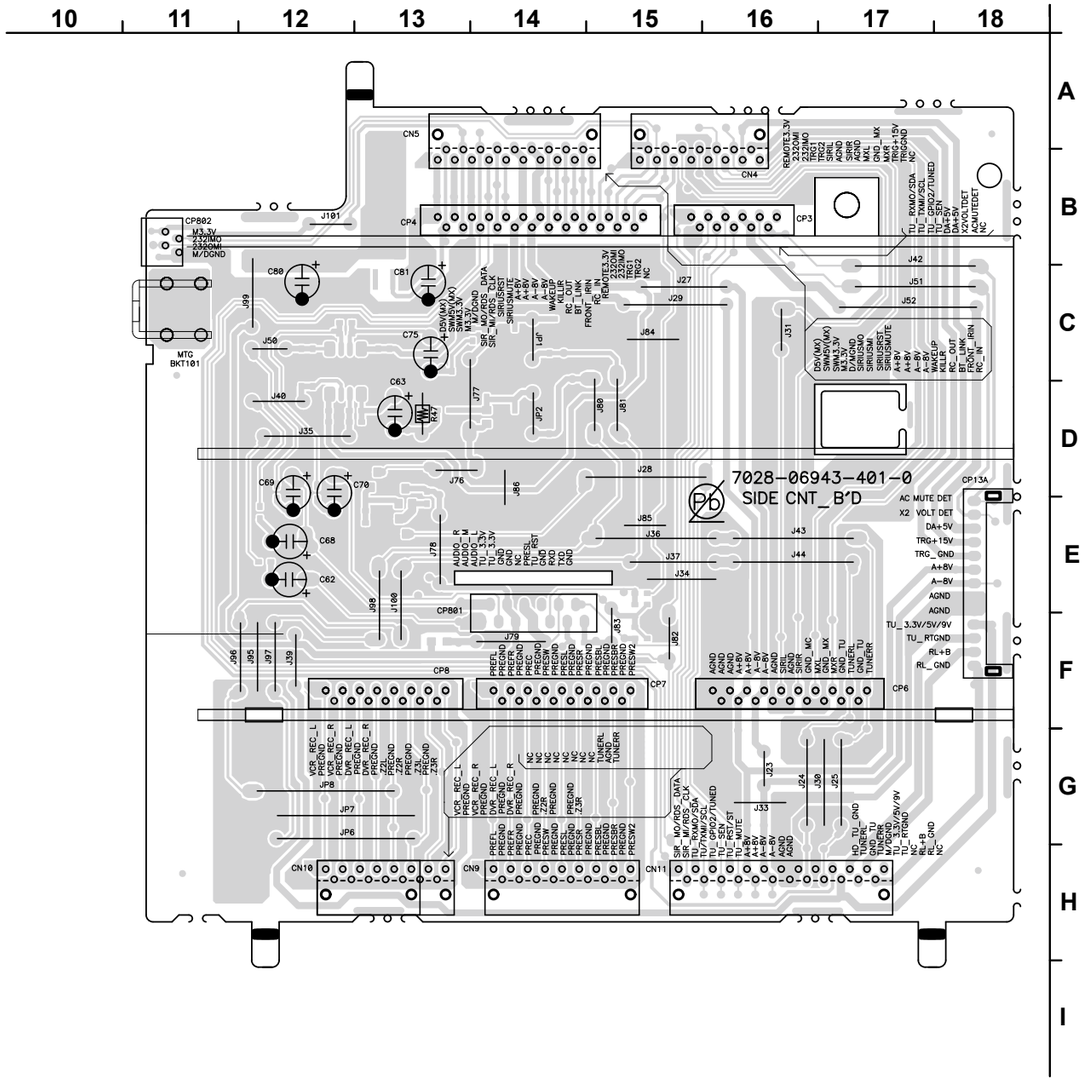

SIRIUS (COMPONENT SIDE)

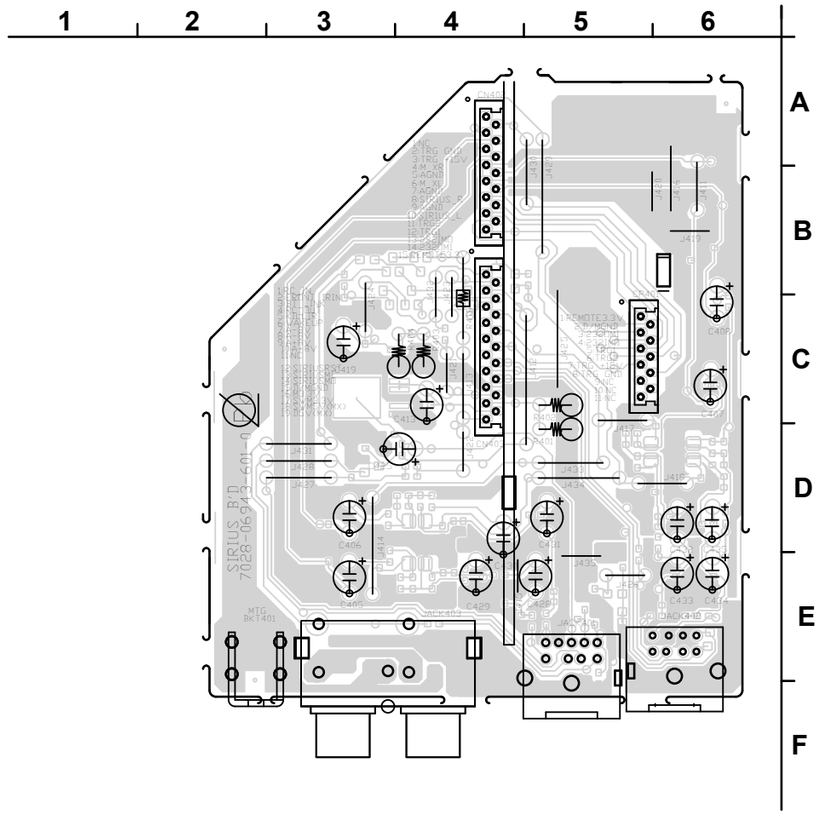

VOLUME (COMPONENT SIDE)

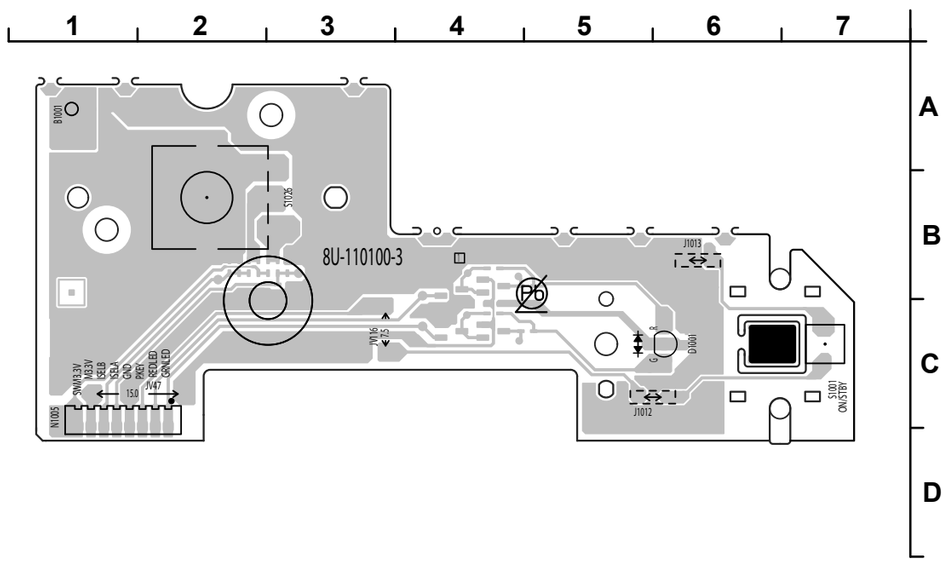

VR CONNECT (COMPONENT SIDE)

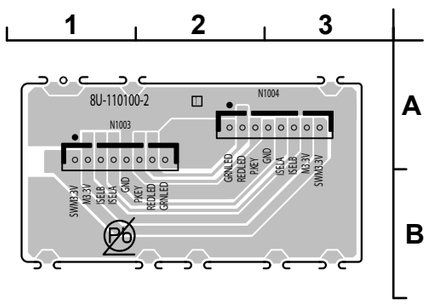

鉛フリー半田
半田付けには、鉛フリー半田 (Sn-Ag-Cu) を使用してください。

Lead-free Solder
When soldering, use the Lead-free Solder (Sn-Ag-Cu).

SIDE_CNT (FOIL SIDE)

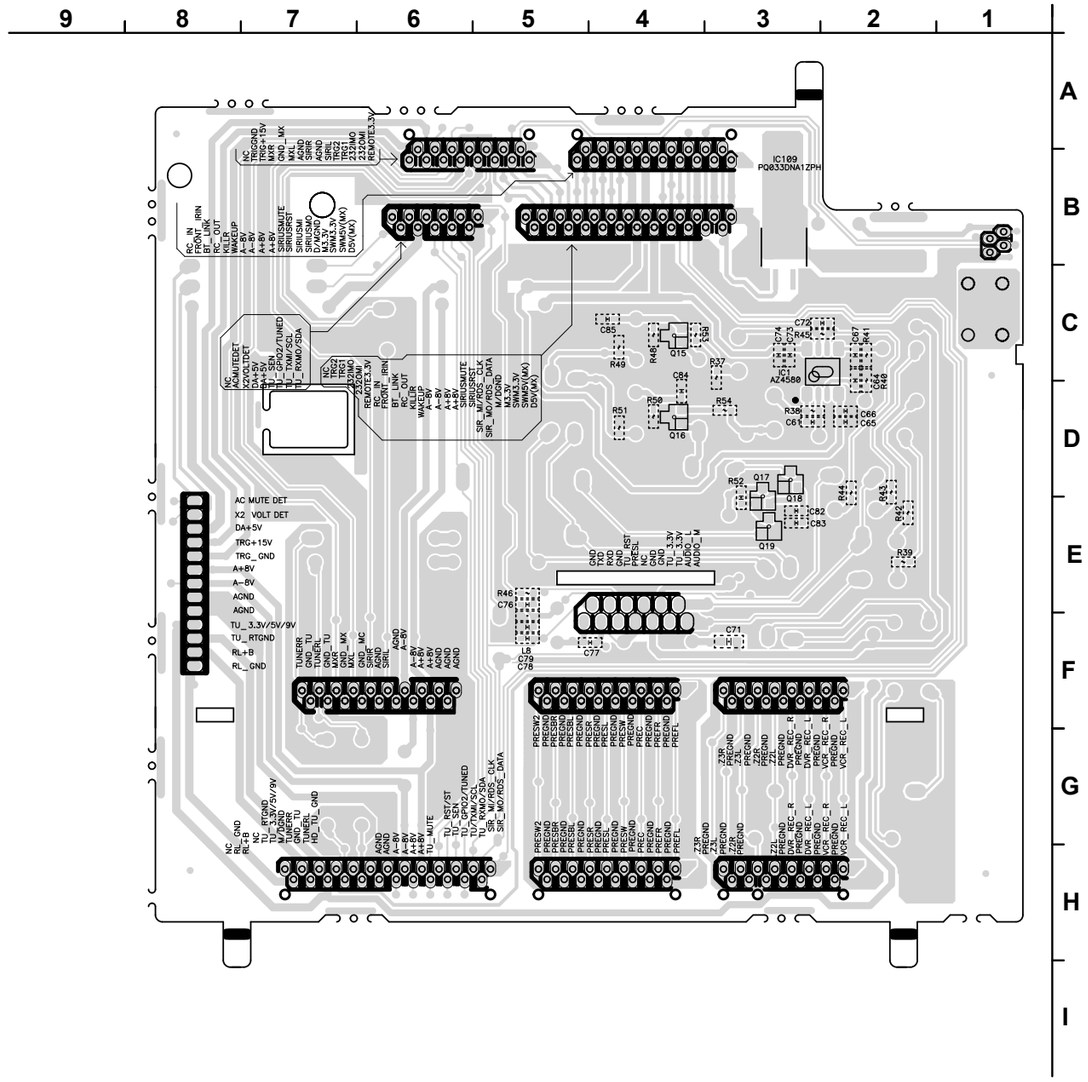

SIRIUS (FOIL SIDE)

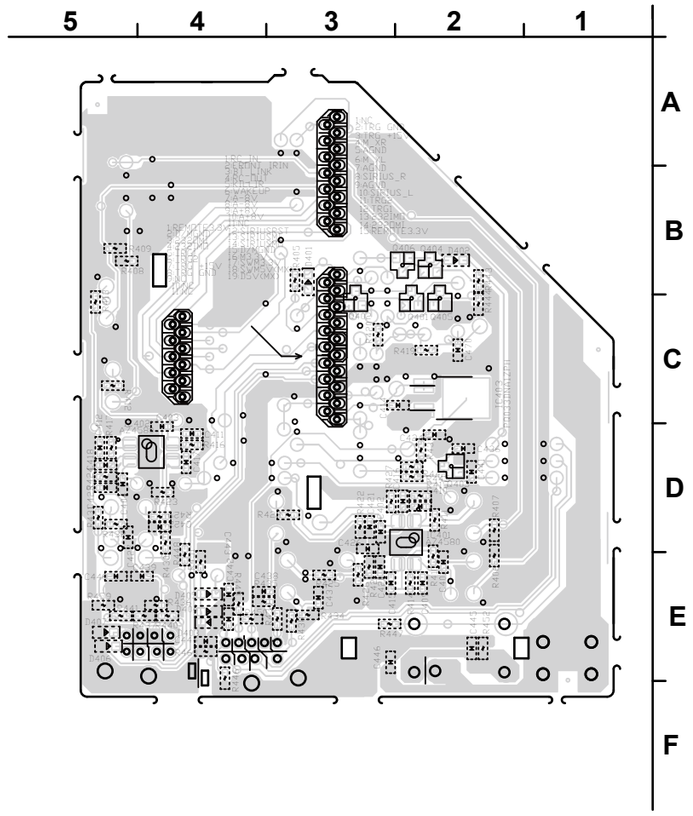

VR CONNECT (FOIL SIDE)

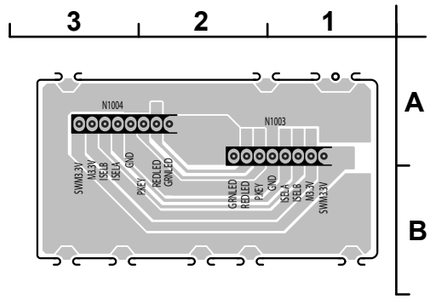

VR CONNECT (FOIL SIDE)

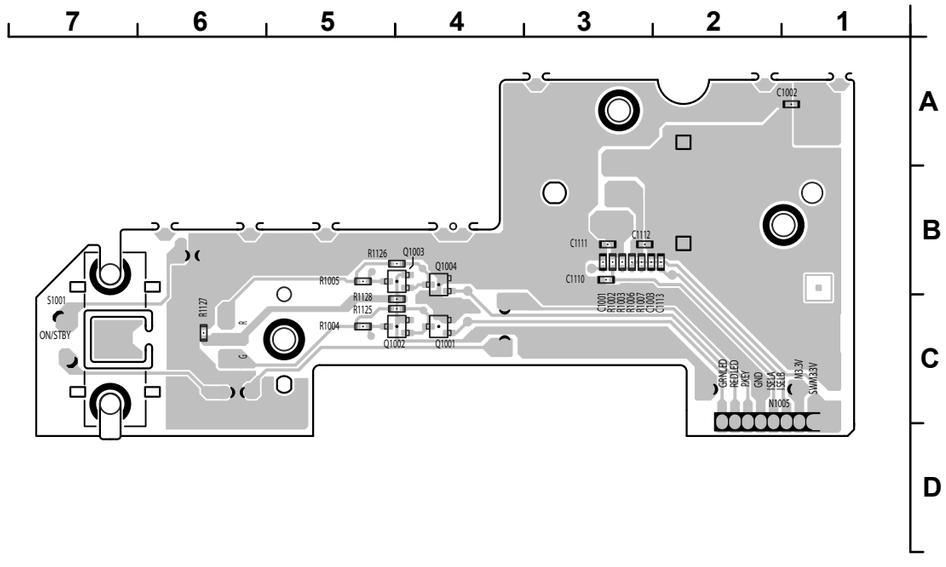

鉛フリー半田
半田付けには、鉛フリー半田 (Sn-Ag-Cu) を使用してください。

Lead-free Solder
When soldering, use the Lead-free Solder (Sn-Ag-Cu).

△2

FLD (COMPONENT SIDE)

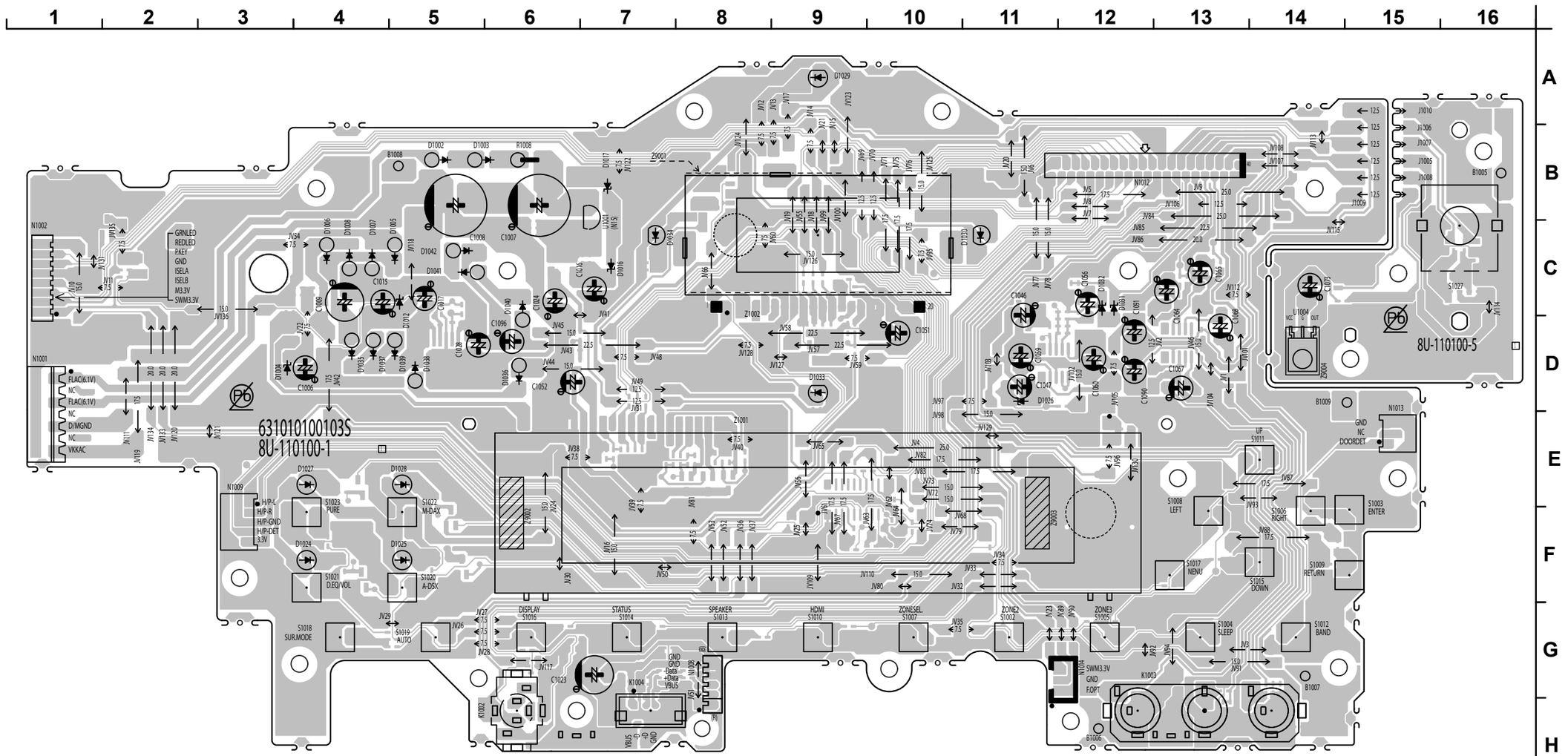
1 2 3 4 5 6 7 8 9 10 11 12 13 14 15 16
A B C D E F G H
6310101001035
8U-110100-1
8U-110100-5
N1002
GRNLED
REDLED
PKEY
GND
ISELA
ISELB
M3.3V
SWM3.3V
N1001
FLAC(6.1V)
NC
FLAC(6.1V)
NC
D/MGND
NC
VKKAC
N1009
H/P-L
H/P-R
H/P-GND
H/P-DET
3.3V
S1023 PURE
S1022 M-DAX
S1021 D.EQ/VOL
S1020 A-DSX
S1018 SUR.MODE
S1019 AUTO
DISPLAY S1016
STATUS S1014
SPEAKER S1013
HDMI S1010
ZONESEL S1007
ZONE2 S1002
ZONE3 S1005
S1004 SLEEP
S1012 BAND
S1008 LEFT
S1003 ENTER
S1006 RIGHT
S1017 MENU
S1015 DOWN
S1009 RETURN
UP S1011
N1013
GND
NC
DOORDET
B1009
B1005
B1007
B1006
K1003
K1004
N1004
SWM3.3V
GND
F.OPT
N1012
U1004
VCC
G
OUT
Z9001
Z1001
Z1002
Z9002
Z9003
C1051
C1052
C1096
C1047
C1046
C1075
C1065
C1066
C1067
C1090
C1091
C1094
C1098
C1100
C1101
C1102
C1103
C1104
C1105
C1106
C1107
C1108
C1128
C1015
C1023
D1026
D1029
D1030
D1031
D1032
D1033
D1034
D1035
D1036
D1037
D1038
D1039
D1040
D1041
D1042
D1101
D1102
D1103
D1104
D1105
D1106
D1107
D1108
R1008
B1008
Q1001
Q1002
Q1003
Q1004
Q1005
Q1006
Q1007
Q1008
Q1009
Q1010
Q1011
Q1012
Q1013
Q1014
Q1015
Q1016
Q1017
Q1018
Q1019
Q1020
Q1021
Q1022
Q1023
Q1024
Q1025
Q1026
Q1027
Q1028
Q1029
Q1030
Q1031
Q1032
Q1033
Q1034
Q1035
Q1036
Q1037
Q1038
Q1039
Q1040

FLD (FOIL SIDE)

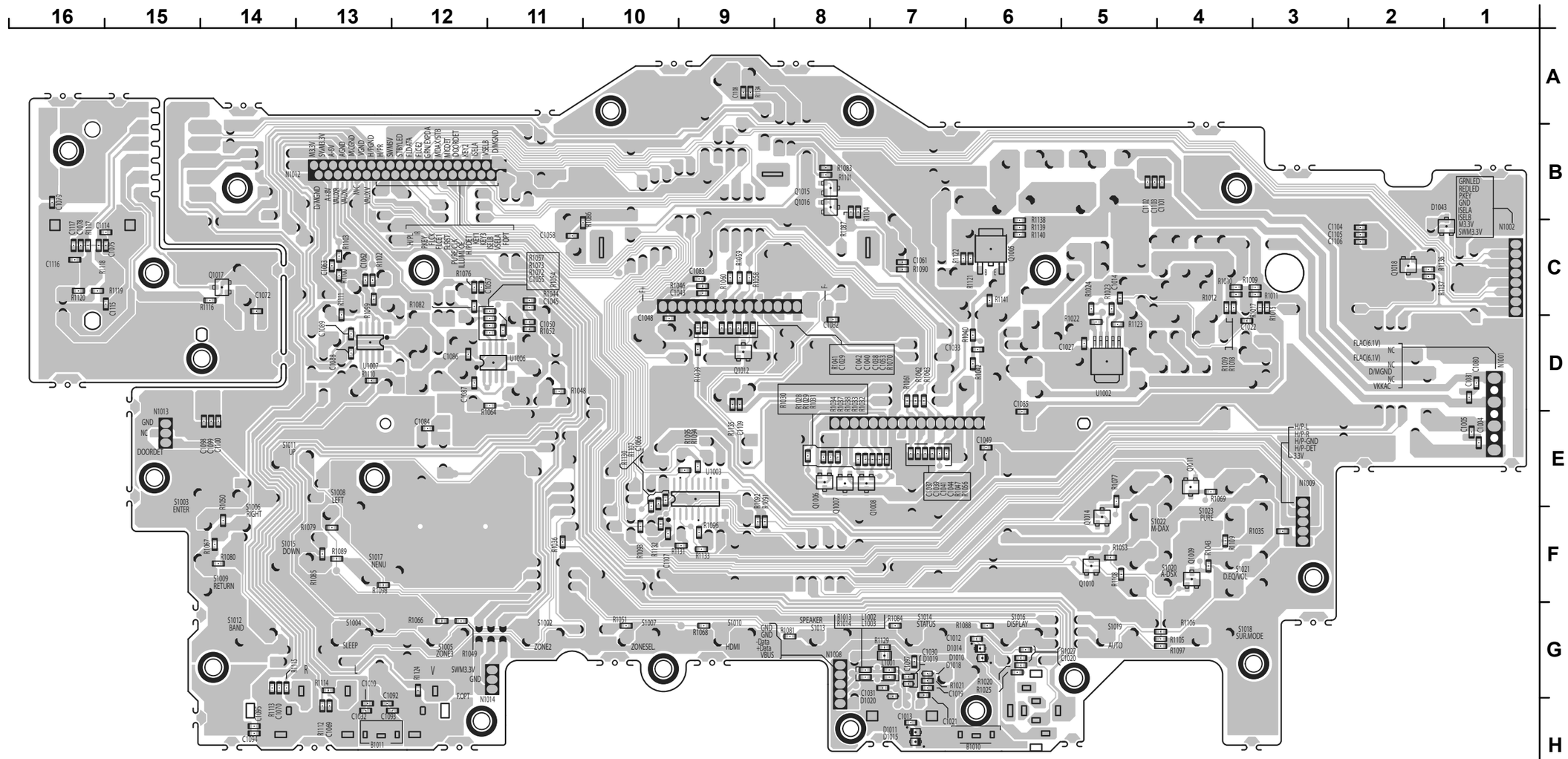

H/P (FOIL SIDE)

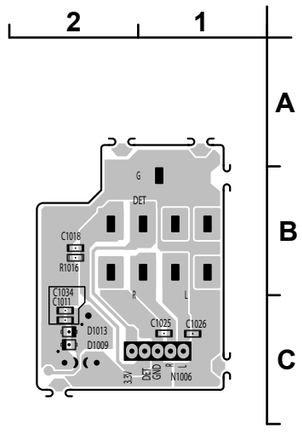

DOORDET (FOIL SIDE)

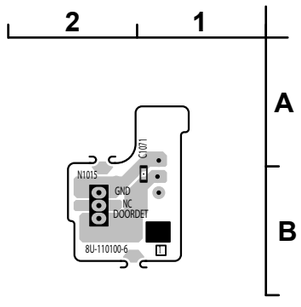

OPT (FOIL SIDE)

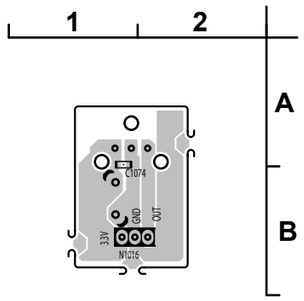

鉛フリー半田
半田付けには、鉛フリー半田 (Sn-Ag-Cu) を使用してください。

Lead-free Solder
When soldering, use the Lead-free Solder (Sn-Ag-Cu).

VIDEO (COMPONENT SIDE)

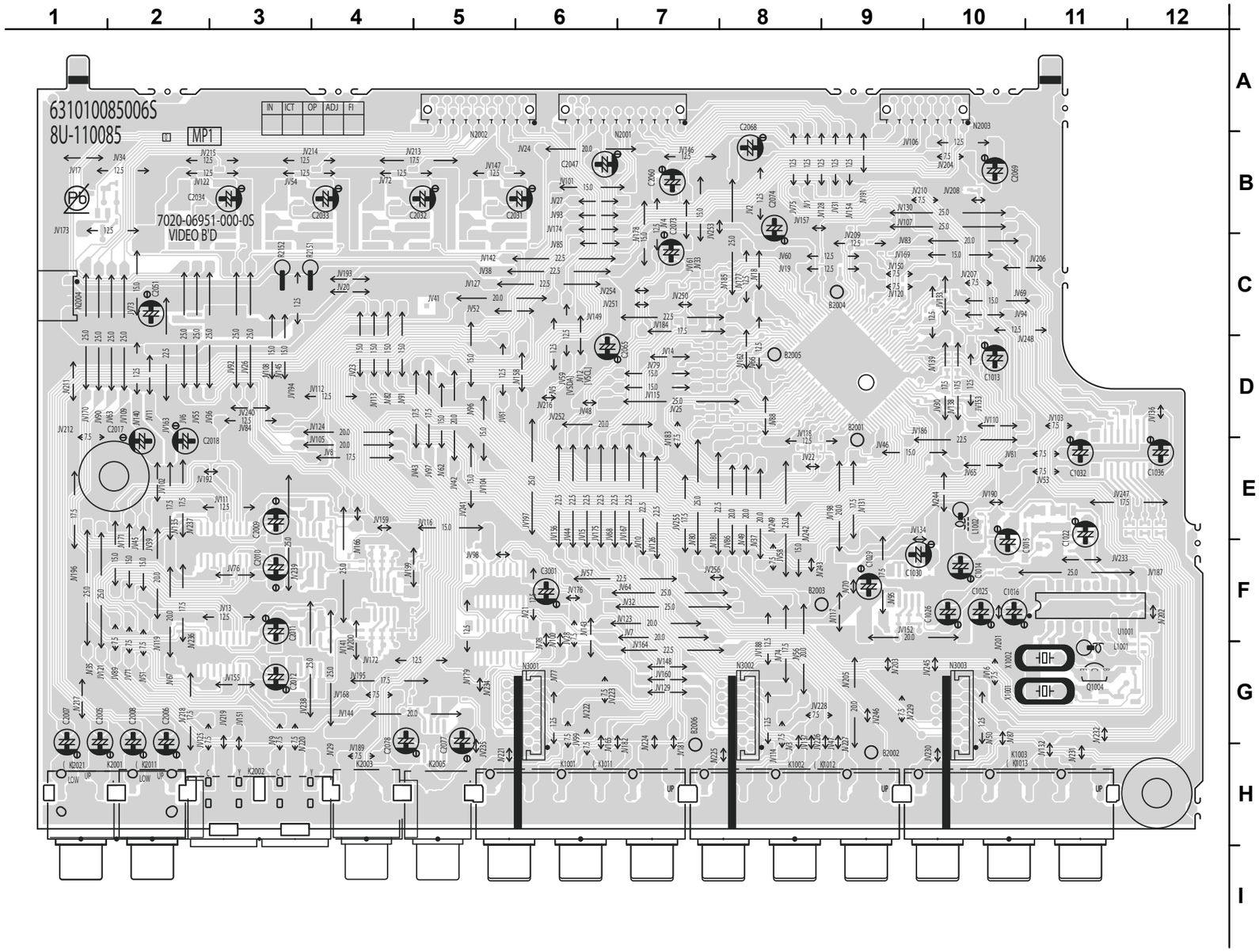

鉛フリー半田
半田付けには、鉛フリー半田 (Sn-Ag-Cu) を使用してください。

Lead-free Solder
When soldering, use the Lead-free Solder (Sn-Ag-Cu).

VIDEO (FOIL SIDE)

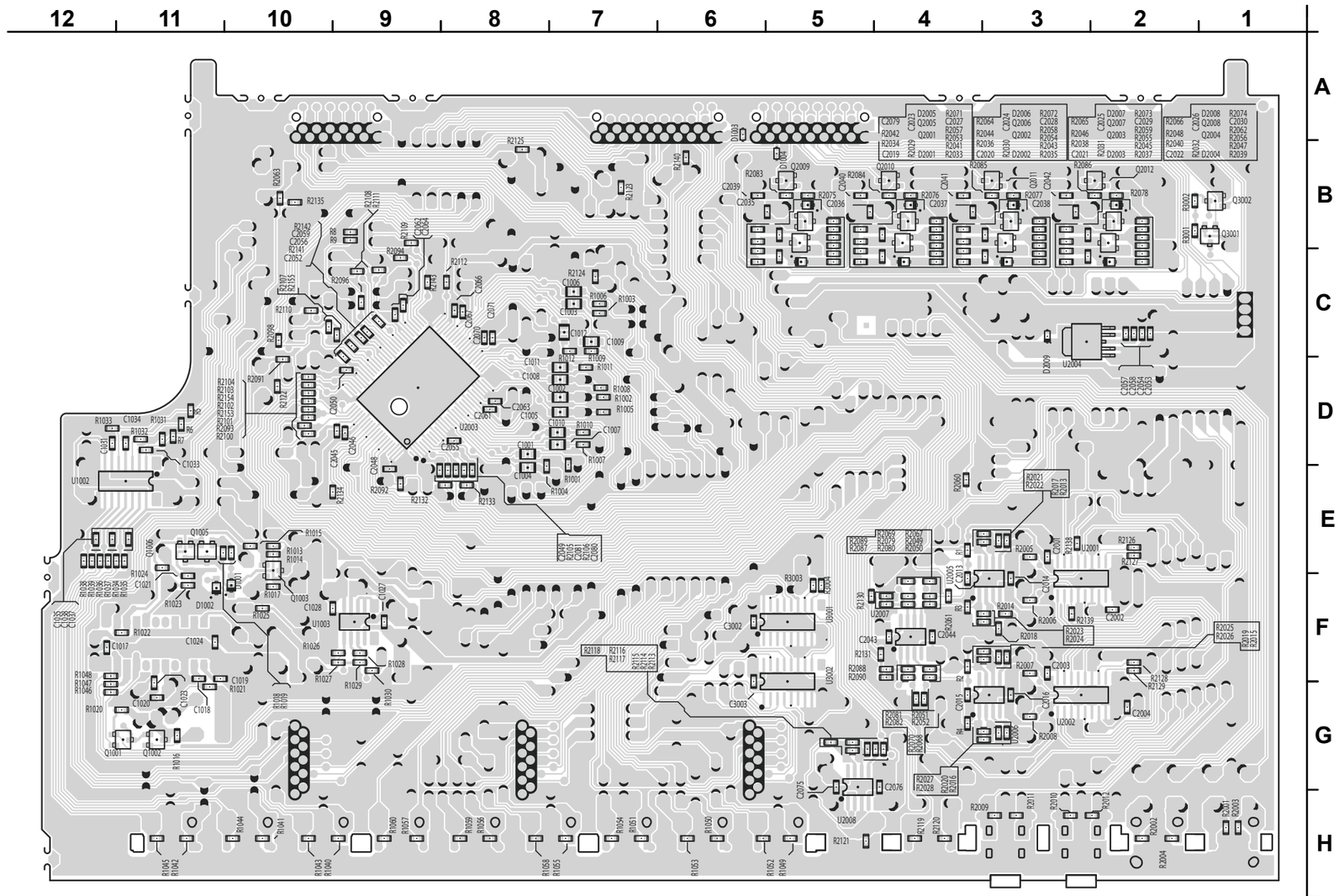

鉛フリー半田
半田付けには、鉛フリー半田 (Sn-Ag-Cu) を使用してください。

Lead-free Solder
When soldering, use the Lead-free Solder (Sn-Ag-Cu).

HDAM AMP (COMPONENT SIDE)

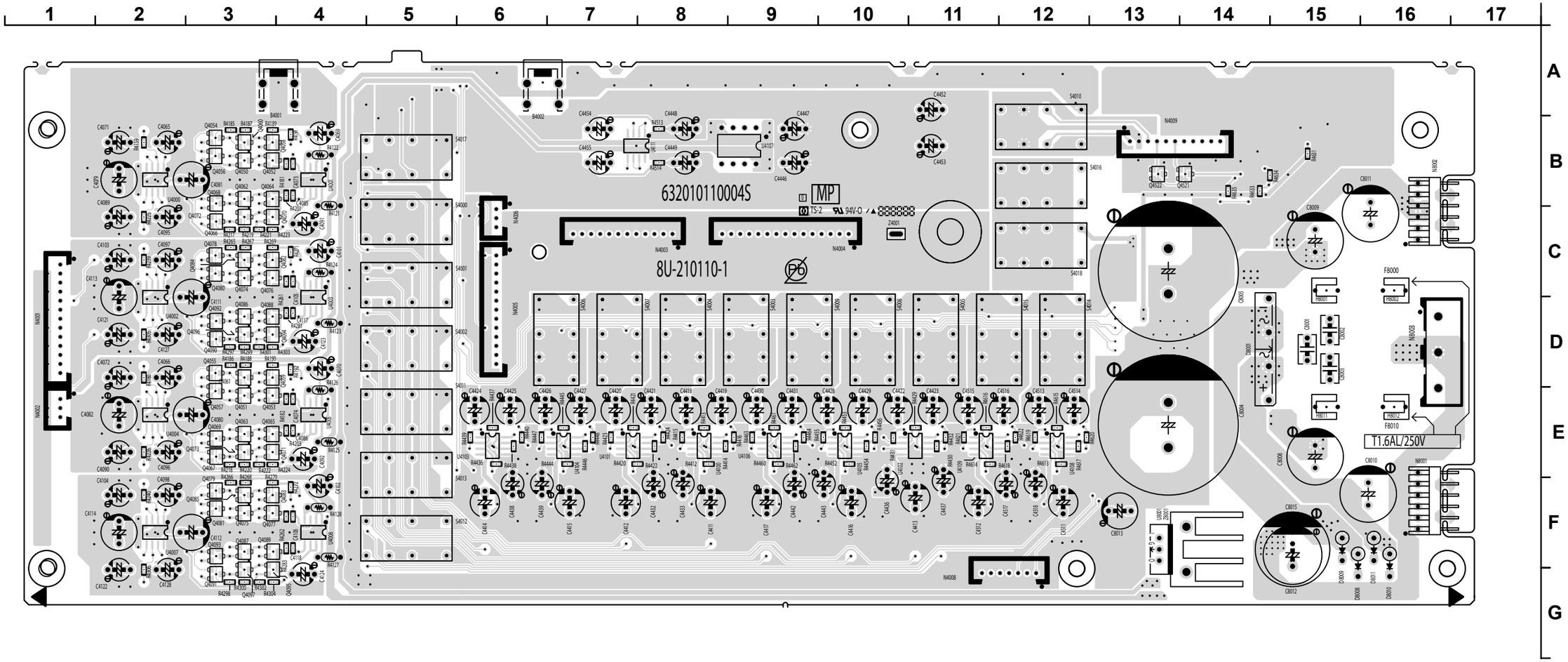

XLR CONNECT (COMPONENT SIDE)

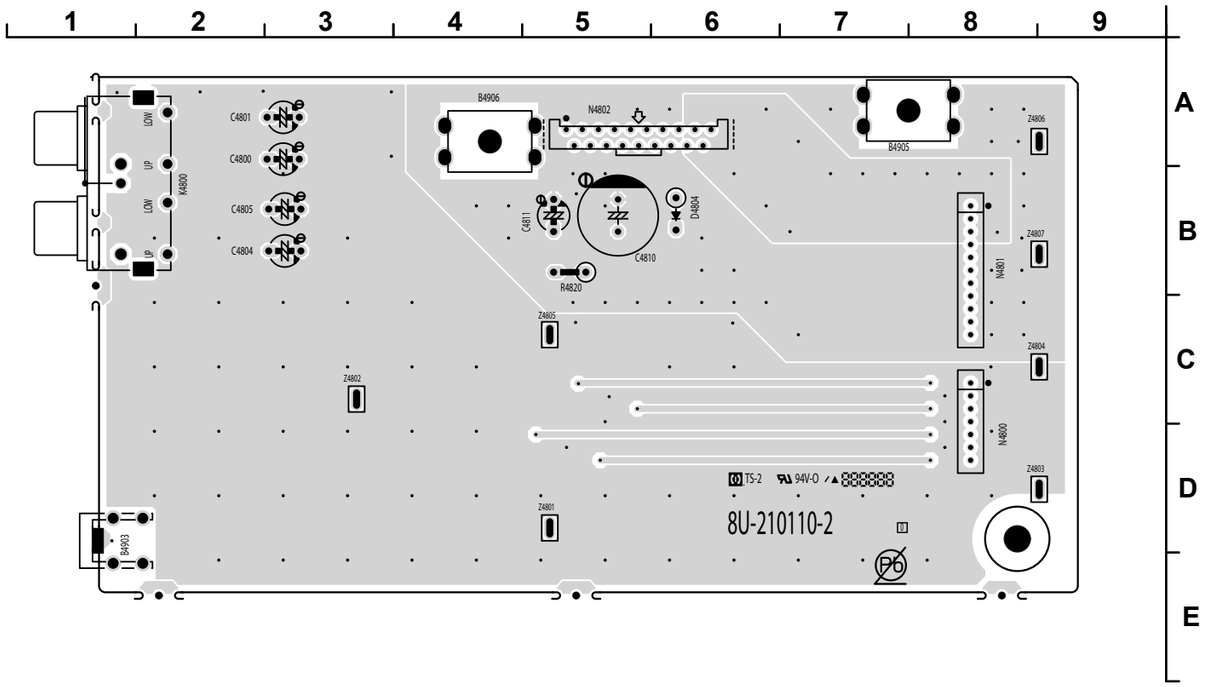

鉛フリー半田
半田付けには、鉛フリー半田 (Sn-Ag-Cu) を使用してください。

Lead-free Solder
When soldering, use the Lead-free Solder (Sn-Ag-Cu).

HDAM AMP (FOIL SIDE)

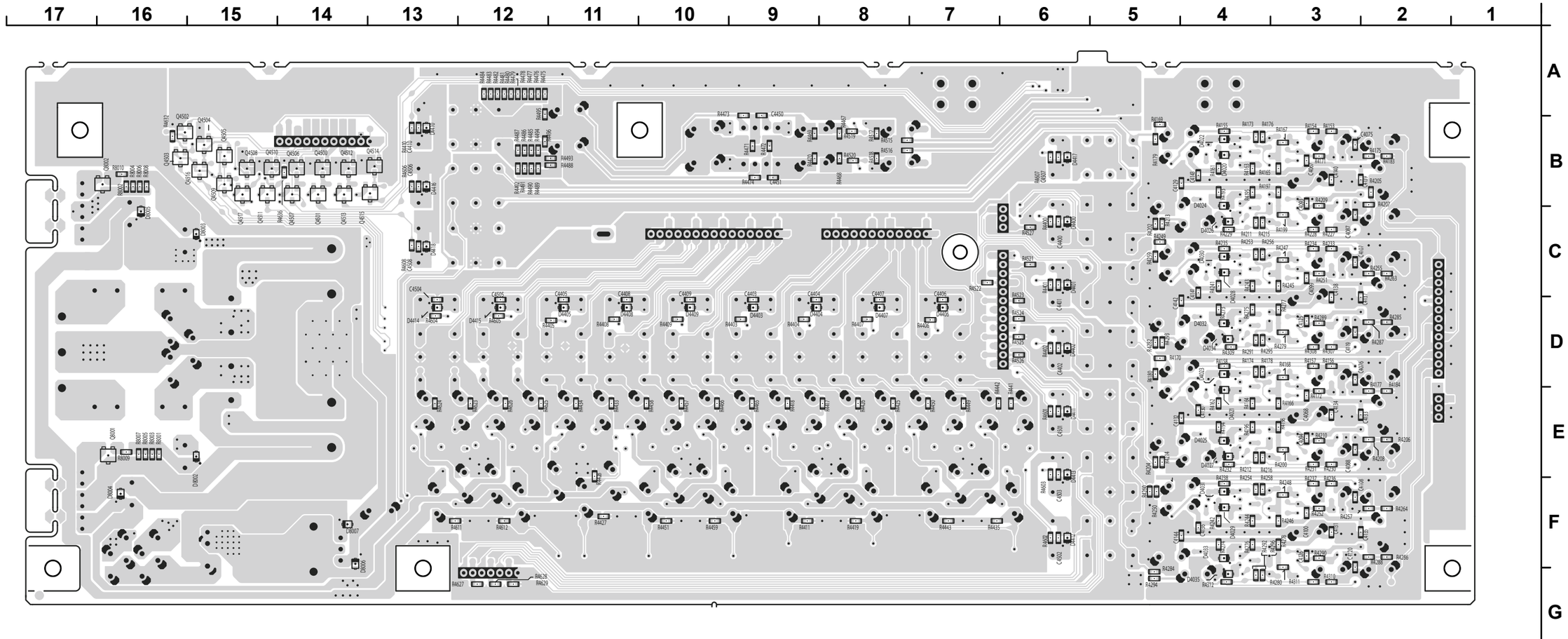

XLR CONNECT (FOIL SIDE)

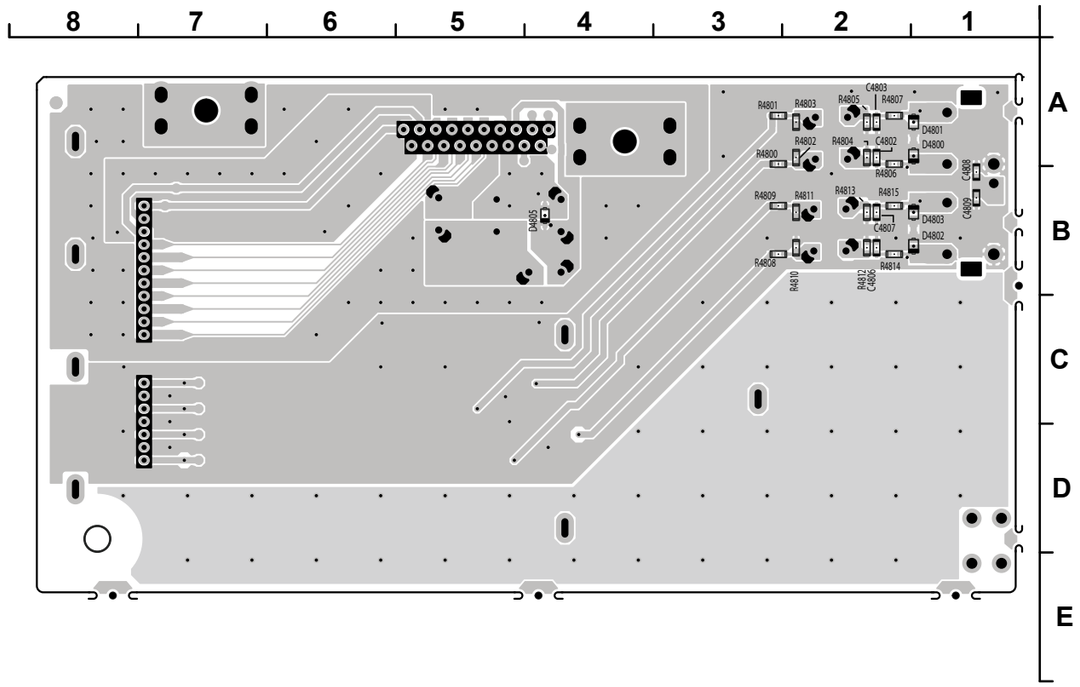

鉛フリー半田
半田付けには、鉛フリー半田 (Sn-Ag-Cu) を使用してください。

Lead-free Solder
When soldering, use the Lead-free Solder (Sn-Ag-Cu).

DIGITAL (COMPONENT SIDE)

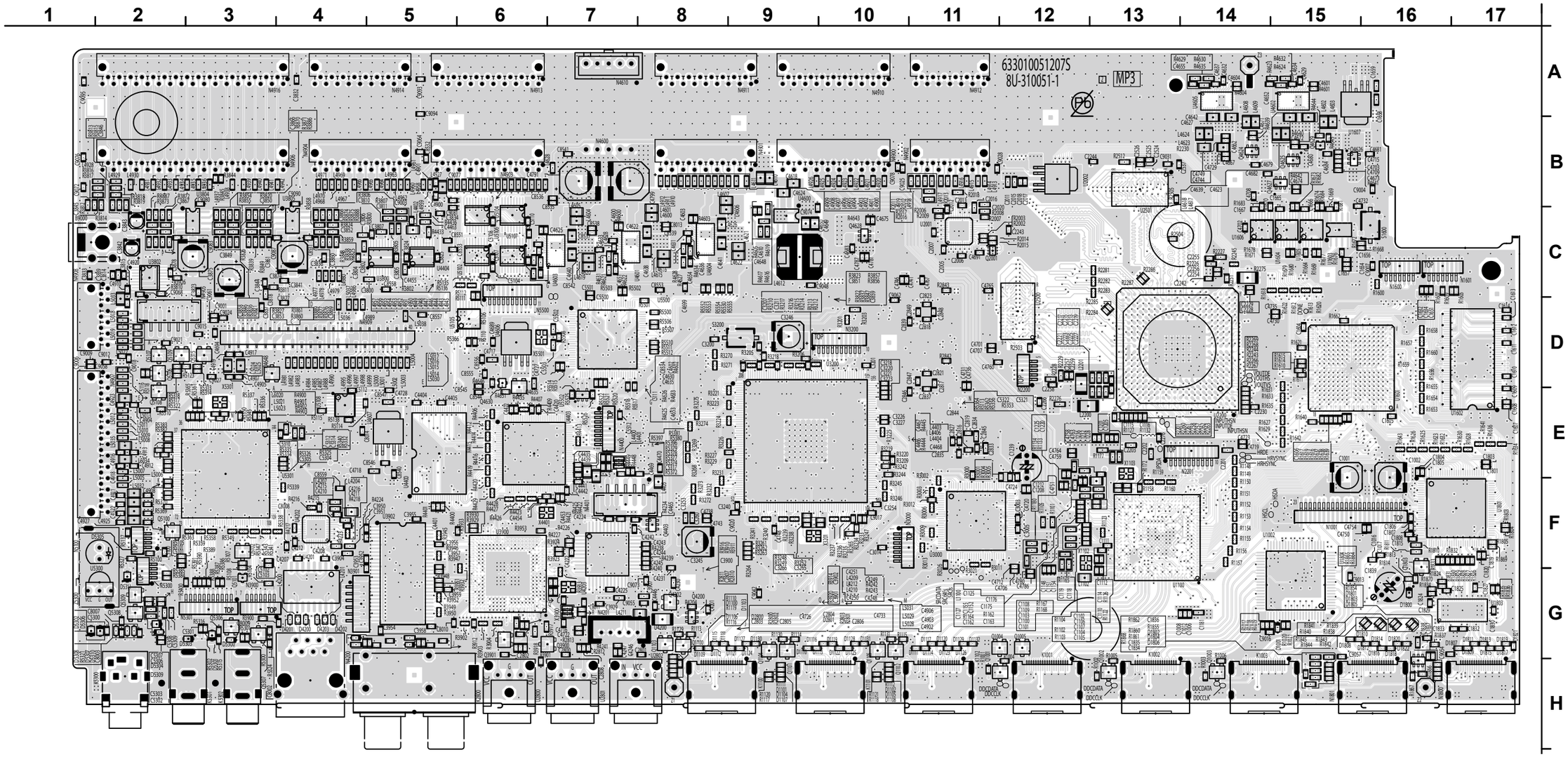

BALANCE OUT (COMPONENT SIDE)

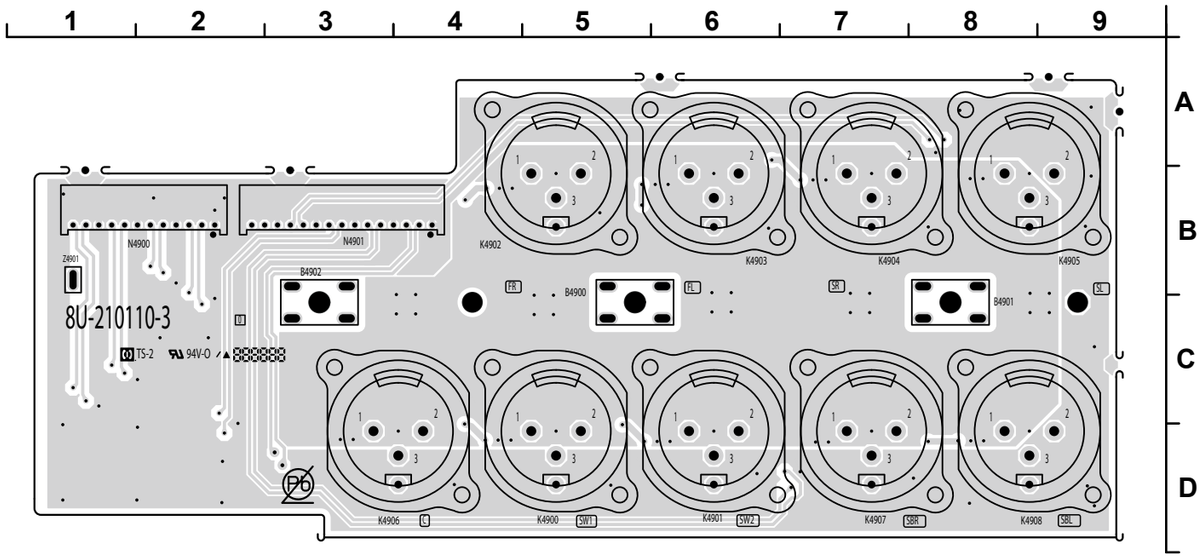

FRONT HDMI (COMPONENT SIDE)

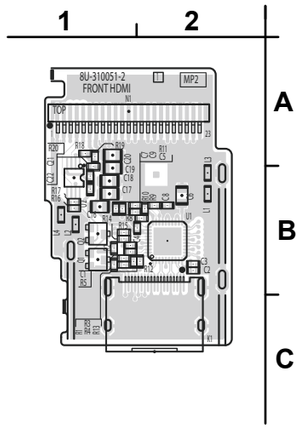

鉛フリー半田
半田付けには、鉛フリー半田 (Sn-Ag-Cu) を使用してください。

Lead-free Solder
When soldering, use the Lead-free Solder (Sn-Ag-Cu).

DIGITAL (FOIL SIDE)

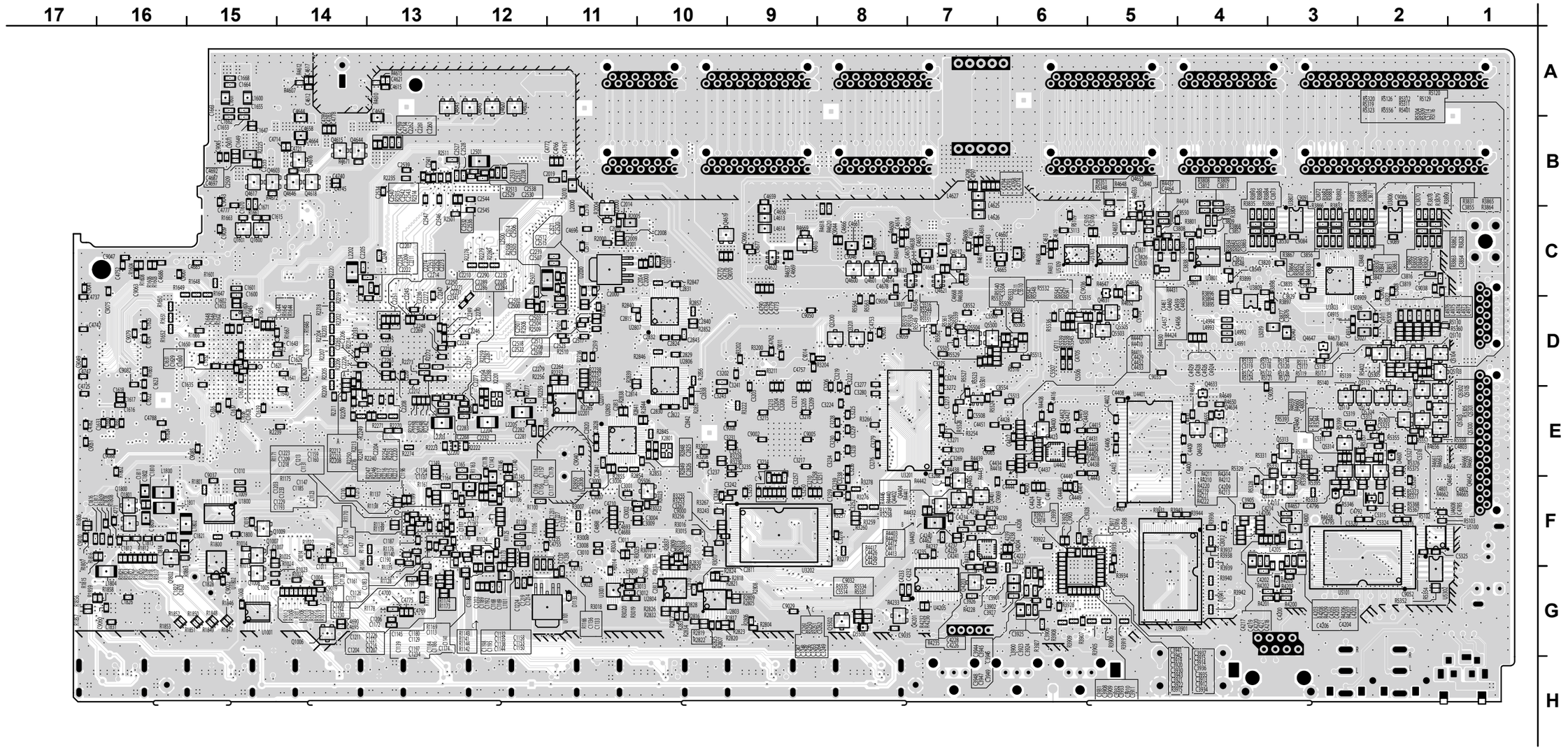

BALANCE OUT (FOIL SIDE)

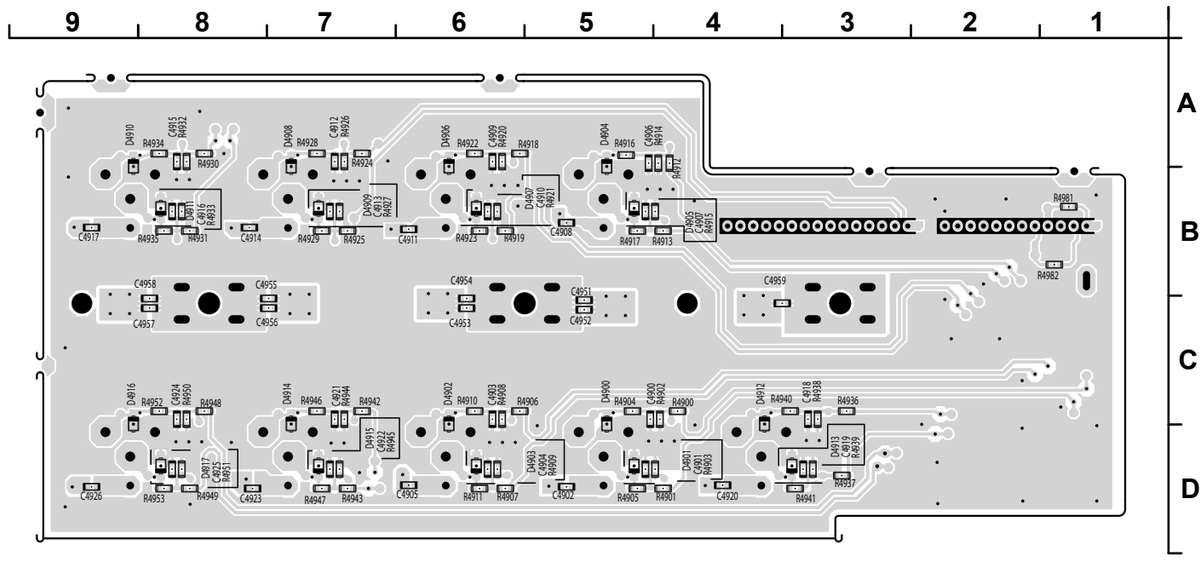

FRONT HDMI (FOIL SIDE)

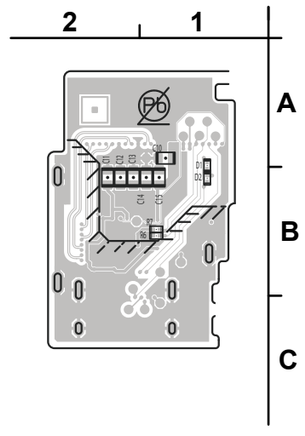

鉛フリー半田
半田付けには、鉛フリー半田 (Sn-Ag-Cu) を使用してください。

Lead-free Solder
When soldering, use the Lead-free Solder (Sn-Ag-Cu).

INPUT (COMPONENT SIDE)

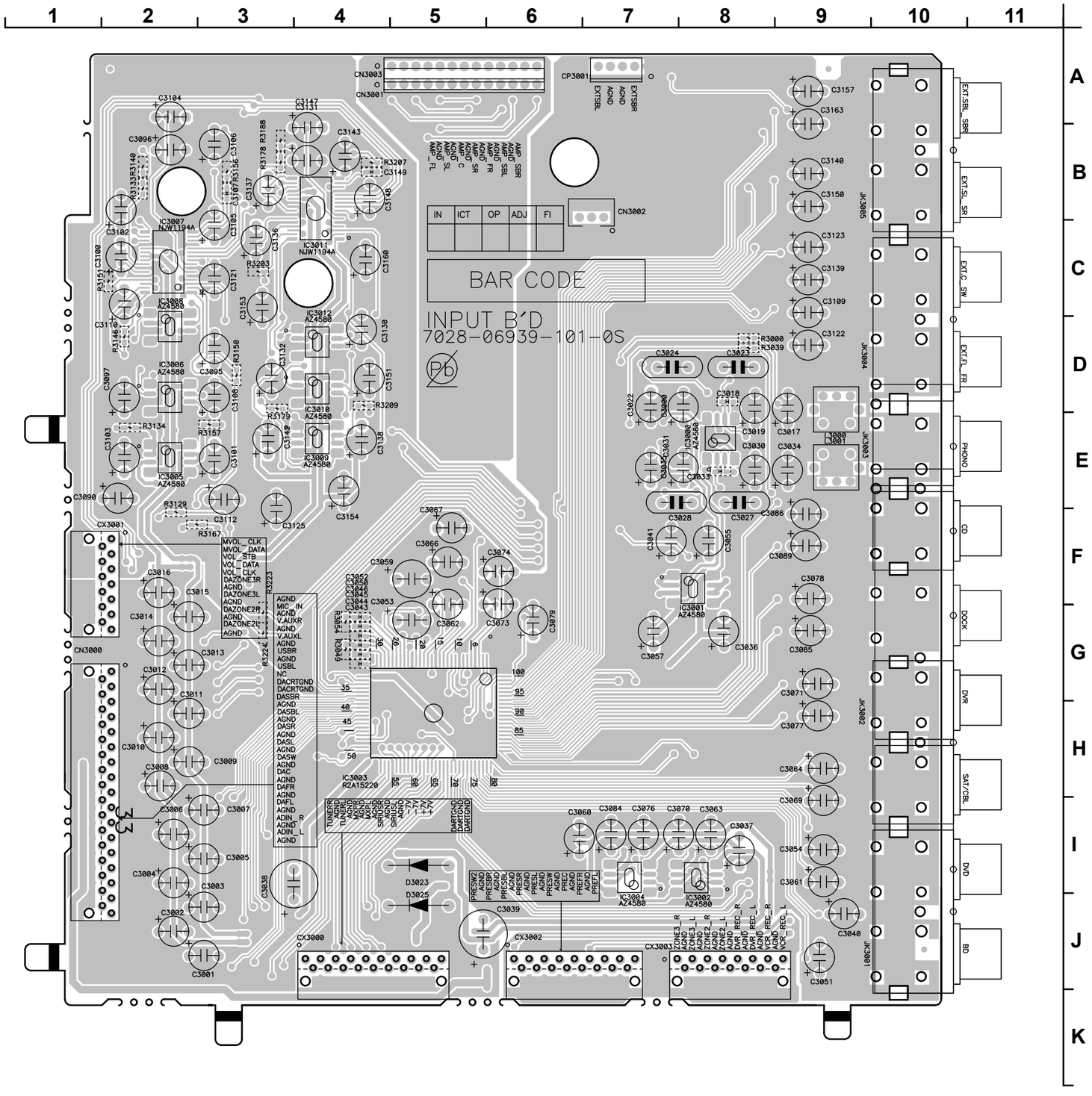

鉛フリー半田
半田付けには、鉛フリー半田 (Sn-Ag-Cu) を使用してください。

Lead-free Solder
When soldering, use the Lead-free Solder (Sn-Ag-Cu).

鉛フリー半田
半田付けには、鉛フリー半田 (Sn-Ag-Cu) を使用してください。

Lead-free Solder
When soldering, use the Lead-free Solder (Sn-Ag-Cu).

INPUT (FOIL SIDE)

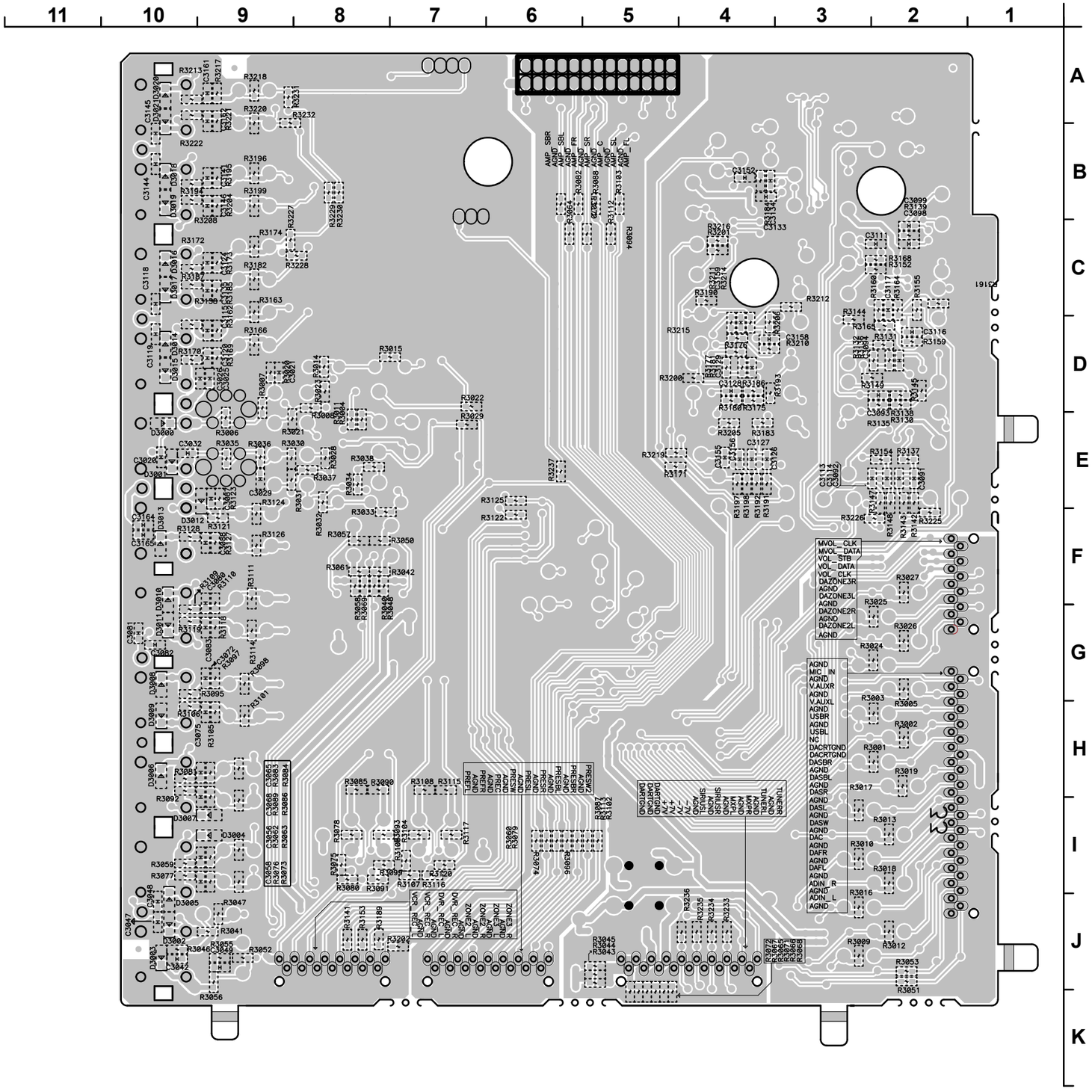

鉛フリー半田
半田付けには、鉛フリー半田 (Sn-Ag-Cu) を使用してください。

Lead-free Solder
When soldering, use the Lead-free Solder (Sn-Ag-Cu).

A.AUDIO (PREOUT) (COMPONENT SIDE)

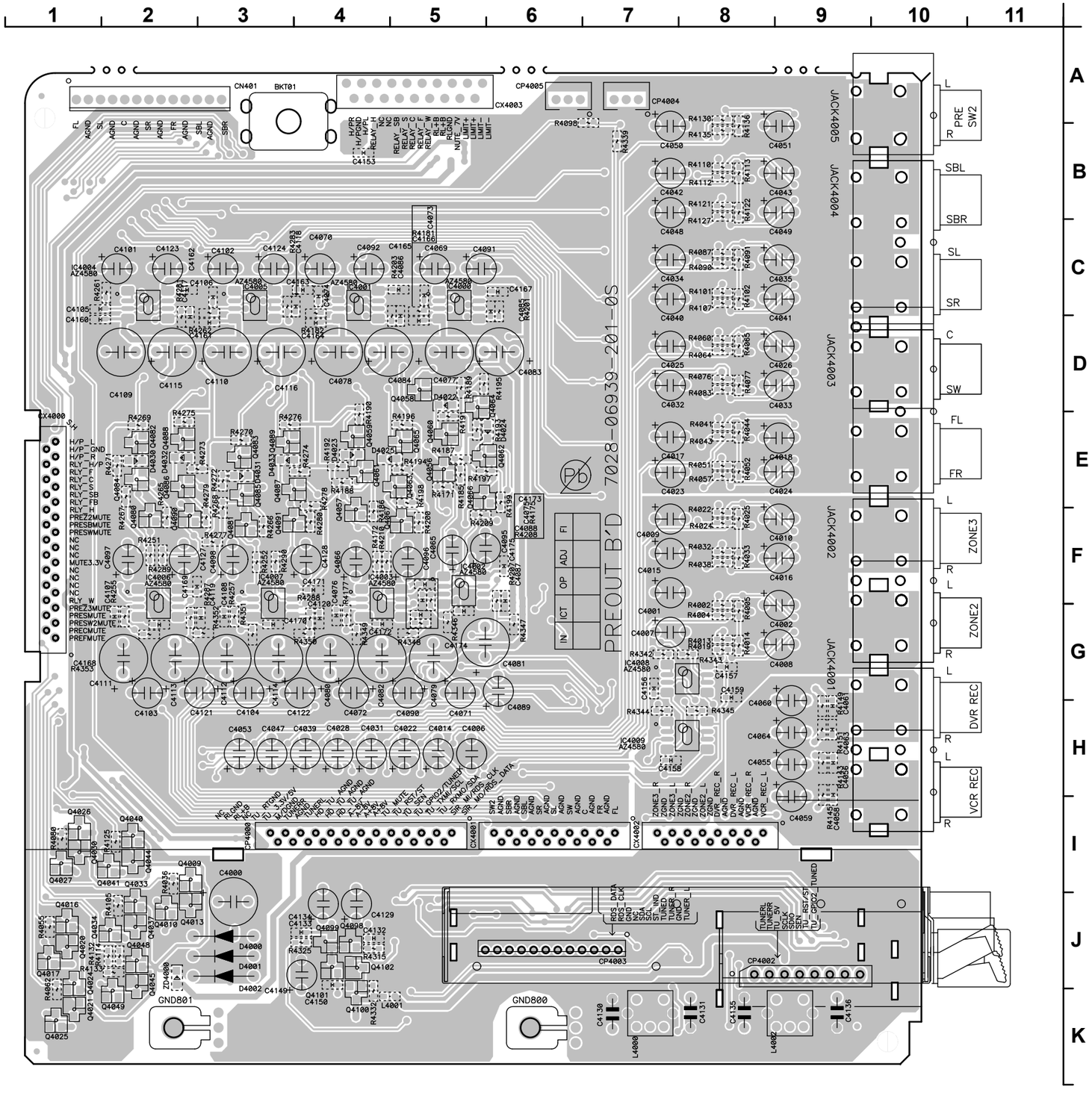

鉛フリー半田
半田付けには、鉛フリー半田 (Sn-Ag-Cu) を使用してください。

Lead-free Solder
When soldering, use the Lead-free Solder (Sn-Ag-Cu).

鉛フリー半田
半田付けには、鉛フリー半田 (Sn-Ag-Cu) を使用してください。

Lead-free Solder
When soldering, use the Lead-free Solder (Sn-Ag-Cu).

A.AUDIO (PREOUT) (FOIL SIDE)

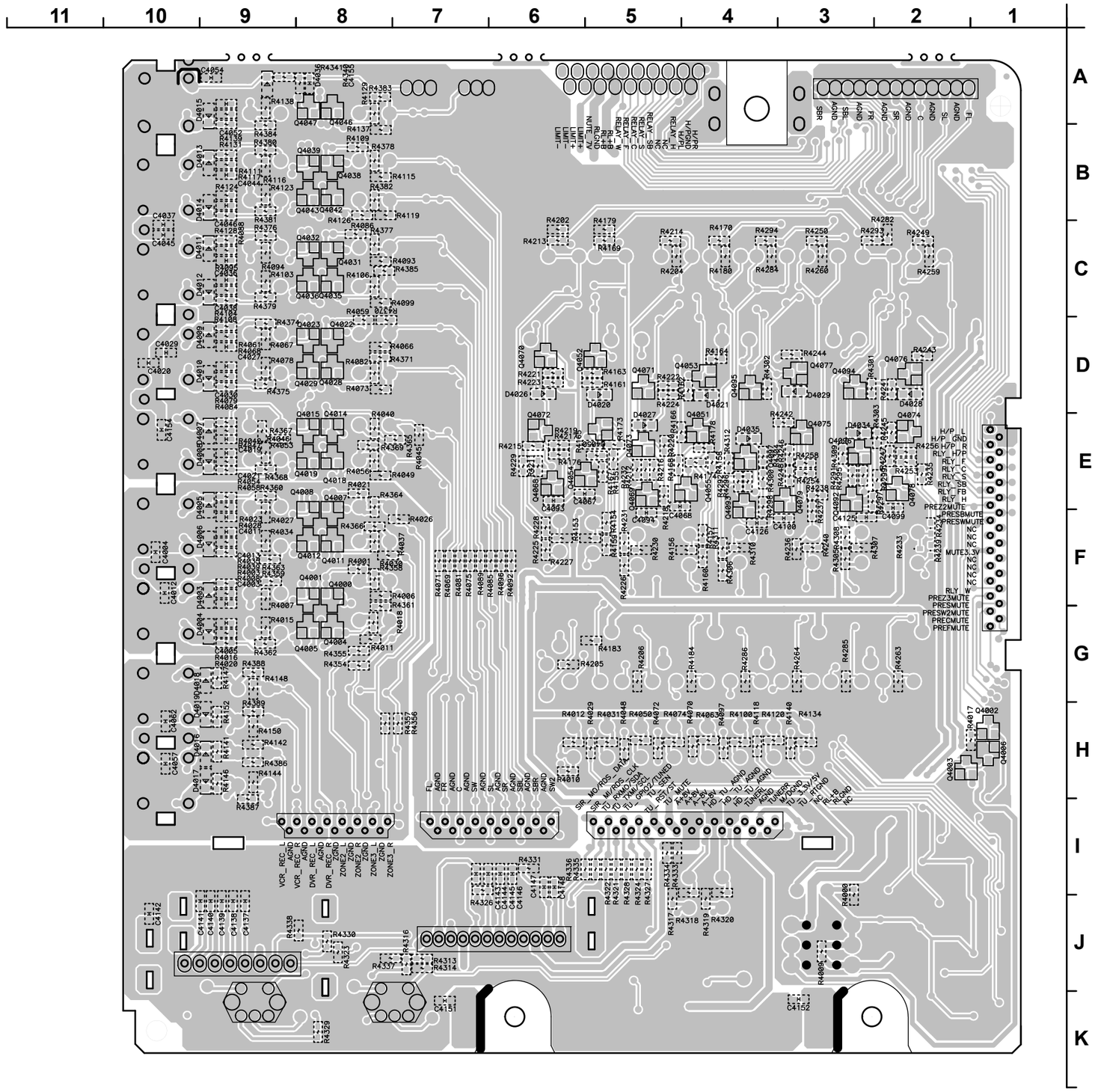

鉛フリー半田
半田付けには、鉛フリー半田 (Sn-Ag-Cu) を使用してください。

Lead-free Solder
When soldering, use the Lead-free Solder (Sn-Ag-Cu).

SMPS B'D

SPK_SMPS

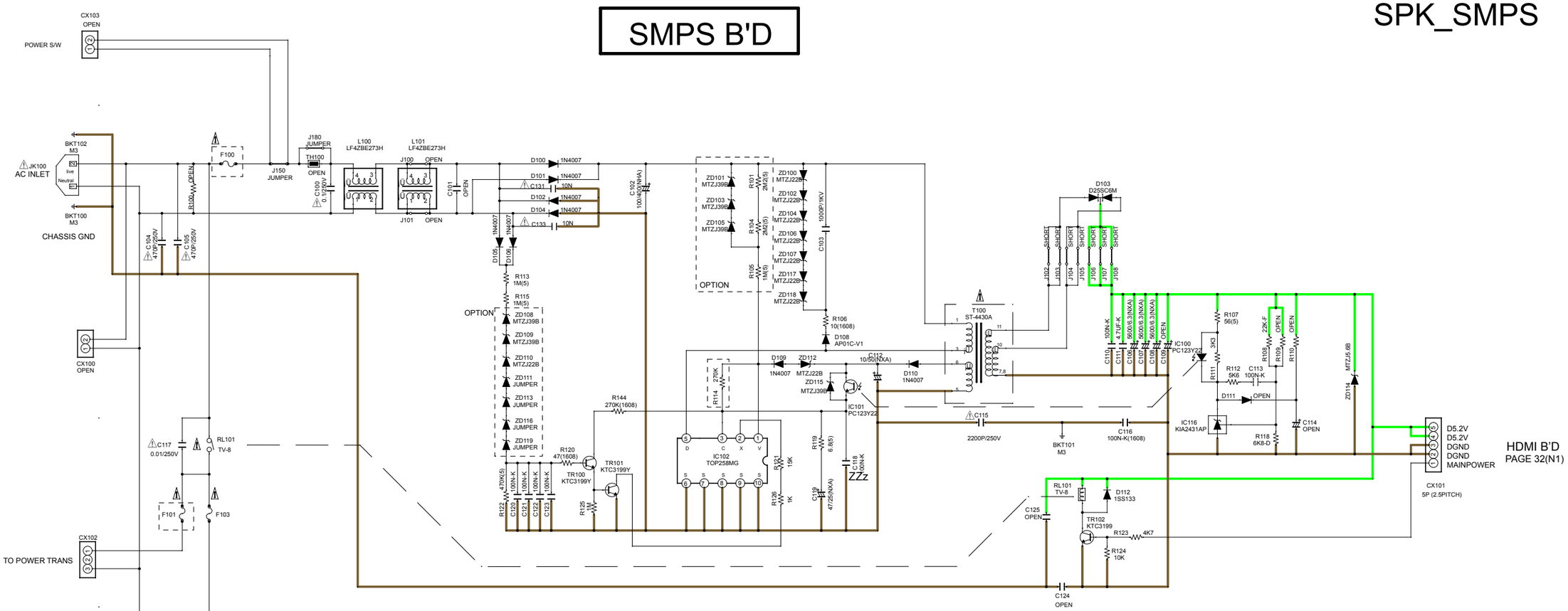

OPTION TABLE

	ZD108	ZD109	ZD110	ZD111	ZD113	ZD116	ZD119	ZD101	ZD103	ZD105	R101	R104	R105	R114
U	MTZJ39B	MTZJ39B	MTZJ22B	JUMPER	JUMPER	JUMPER	JUMPER	MTZJ39B	MTZJ39B	MTZJ39B	2M2(5)	2M2(5)	1M (5)	270K
N	1M (5)	1M (5)	MTZJ39B	MTZJ39B	MTZJ39B	MTZJ39B	MTZJ39B	OPEN	OPEN	OPEN	OPEN	OPEN	OPEN	56K
F	MTZJ39B	MTZJ 39B	JUMPER	JUMPER	JUMPER	JUMPER	JUMPER	MTZJ39B	MTZJ39B	MTZJ39B	2M2(5)	2M2(5)	1M (5)	270K
K	1M (5)	1M (5)	MTZJ39B	MTZJ39B	MTZJ39B	MTZJ39B	MTZJ39B	OPEN	OPEN	OPEN	OPEN	OPEN	OPEN	56K

	F100				F101			
	SR5005	SR6005	SR7005	AV7005	SR5005	SR6005	SR7005	AV7005
U	2A/250V	2A/250V	2A/250V	2A/250V	6.3A/250V	6.3A/250V	6.3A/250V	1.6A/250V
N	1.6A/250V	1.6A/250V	1.6A/250V	1.6A/250V	3.15A/250V	3.15A/250V	3.15A/250V	1.0A/250V
F	2A/250V	-	2A/250V	2A/250V	6.3A/250V	-	8A/250V	1.6A/250V
K	1.6A/250V	1.6A/250V	1.6A/250V	-	3.15A/250V	3.15A/250V	3.15A/250V	-

REGULATOR B'D

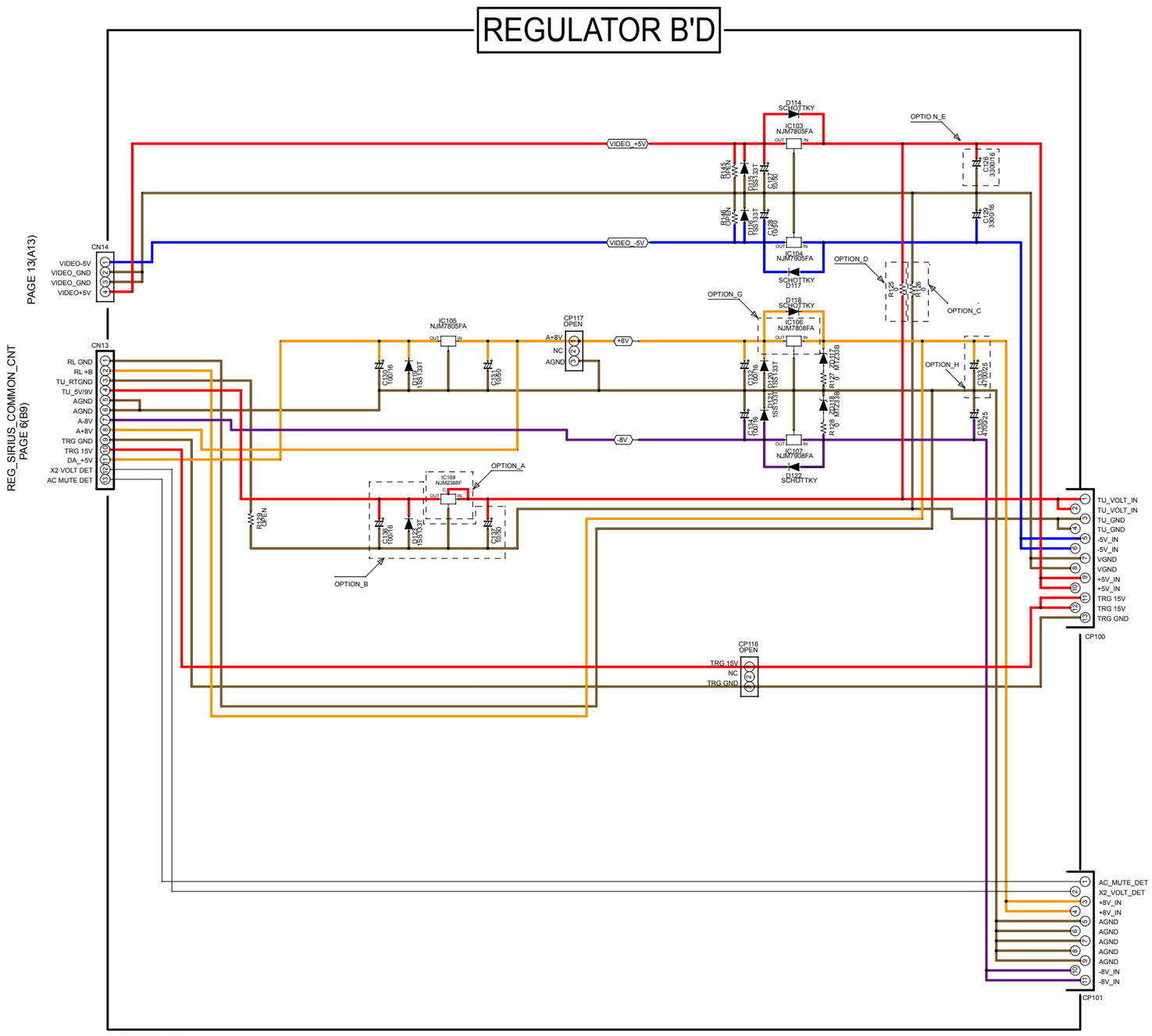

REG_CNT B'D

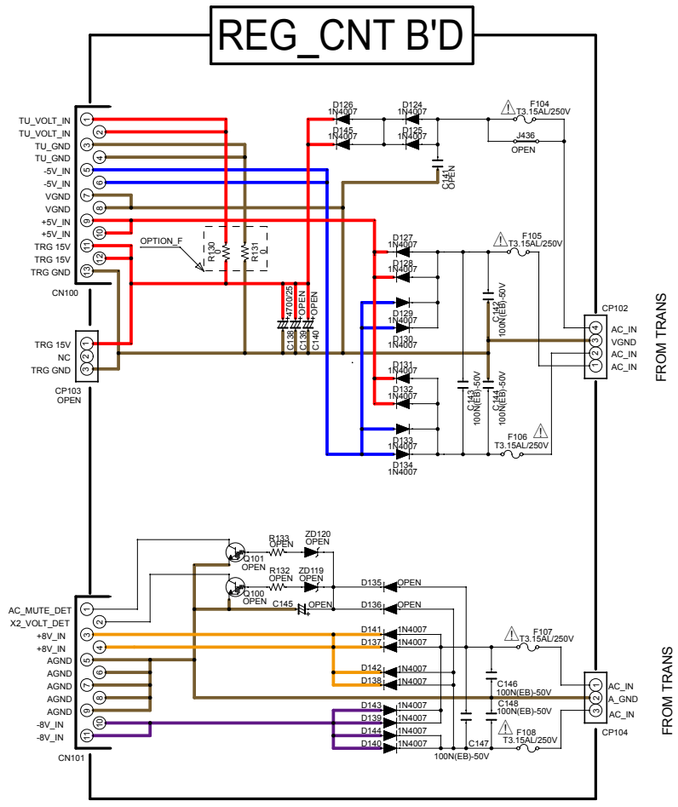

*OPTION TABLE

MODEL	SR5005				SR6005/AV7005			SR7005			
AREA	U	N	F	K	U	N	K	U	N	F	K
OPTION_A	NJM2388F05	NJM2388F09	NJM2388F09	NJM2388F09	OPEN	NJM2388F09	NJM2388F09	OPEN	NJM2388F09	NJM2388F09	NJM2388F09
OPTION_B	USE	USE	USE	USE	NOT USE	USE	USE	NOT USE	USE	USE	USE
OPTION_C	NOT USE	USE	USE	USE	NOT USE	USE	USE	NOT USE	USE	USE	USE
OPTION_D	USE	NOT USE	NOT USE	NOT USE	NOT USE	NOT USE	NOT USE	NOT USE	NOT USE	NOT USE	NOT USE
OPTION_E	4700/16	3300/16	3300/16	3300/16	3300/16	3300/16	3300/16	3300/16	3300/16	3300/16	3300/16
OPTION_F	NOT USE	USE	USE	USE	NOT USE	USE	USE	NOT USE	USE	USE	USE
OPTION_G	NJM7808FA	NJM7808FA	NJM7808FA	NJM7808FA	NJM7808FA	NJM7808FA	NJM7808FA	BA08T	BA08T	BA08T	BA08T
OPTION_H	4700/25	4700/25	4700/25	4700/25	4700/25	4700/25	4700/25	6800/25	6800/25	6800/25	6800/25

REG_SIRIUS_COMMON CNT 2/4

SIDE CONNECTOR

OPTION A&B

MODEL	U	N	F	K
SR5005	X	X	X	X
SR6005	O	X	-	X
SR7005	O	X	X	X
AV7005	O	X	X	X

OPTION_A

U ONLY

OPTION_B

IC109 PQ033DNA1ZPH

IC1A:A AZ4580MTR

IC1B:B AZ4580MTR

TO HD RADIO

TO HD TUNER

CP801

AUDIO_R, AUDIO_M, AUDIO_L, TU_3.3V/5V/9V, TU_3.3V/5V/9V, GND, GND, GND, NC, TU_RST/ST, GND, TU_RXMO/SDA, TU_TXMI/SCL, GND

TU_RST/ST, TU_RXMO/SDA, TU_TXMI/SCL, A-8V, A+8V, TUNERL, TUNERR, TU_3.3V/5V/9V, TU_MUTE

TO RC-5
PAGE 8(A4)

CN4 C125Z2-15P

NC, TRIGGND, TRIG+15V, MXR, GND_MX, MXL, AGND, SIRIR, AGND, SIRIL, TRG2, TRG1, 232IMO, 232OMI, REMOTE3.3V

TO RC-5
PAGE 8(A1)

CN5 C125Z2-19P

RC_IN, FRONT IRIN, BT_LINK, RC_OUT, KILLIR, WAKEUP, A-8V, A-8V, A+8V, A+8V, SIRIUSMUTE, SIRIUSRST, SIRIUSMI, SIRIUSMO, D/MGND, M3.3V, SWM5V, SWM5V(MX), D5V(MX)

CP802 OPEN

M3.3V, 232IMO, 232OMI, D/MGND

CP3 C125Z1-11 P

NC, ACMUTEDET, X2VOLTDET, DA+5V, DA+5V, TU_MUTE, TU_RST/ST, TU_TXMI/SCL, TU_GPIO27/TUNER, TU_TXMI/SCL, TU_RXMO/SDA

TO DIGITAL
PAGE 33(N2)

CP4 C125Z1-15P

NC, TRG2, TRG1, 232IMO, 232OMI, REMOTE3.3V, RC_IN, BT_LINK, FRONT_IRIN, RC_OUT, KILLIR, WAKEUP, A-8V, A-8V, A+8V, A+8V, SIRIUSMUTE, SIRIUSRST, SIR_MIXRDS_CLK, SIR_MIXRDS_DATA, M/DGND, M3.3V, SWM5V, SWM5V(MX), D5V(MX)

TO DIGITAL
PAGE 33(N4)

TO A_AUDIO
PAGE 9(E1)

CP6 C125Z1-19P

TUNERR, GND_TU, TUNERL, GND_TU, MXR, GND_MX, MXL, GND_MX, SIRIR, AGND, SIRIL, AGND, A-8V, A-8V, A+8V, A+8V, AGND, AGND, AGND

TO A_AUDIO PAGE 9(O5)

CP7 C125Z1-17P

PRESW2, PREGND, PRESBR, PREGND, PRESBL, PREGND, PRESR, PREGND, PRESL, PREGND, PRESW, PREGND, PREC, PREGND, PREFR, PREGND, PREFL

TO A_AUDIO PAGE 9(O8)

CP8 C125Z1-15P

Z2R, PREGND, Z2L, PREGND, Z2R, PREGND, Z2L, PREGND, DVR_REC_R, PREGND, DVR_REC_L, PREGND, VCR_REC_R, PREGND, VCR_REC_L

CN11 C125Z2-25P

NC, RLGND, RL+B, NC, TU_RTGND, TU_3.3V/5V/9V, M/DGND, TUNERR, GND_TU, TUNERL, GND_TU, HD_TU_GND, AGND, A-8V, AGND, A-8V, A+8V, A+8V, TU_MUTE, TU_RST/ST, TU_SBN, TU_GPIO27/TUNER, TU_TXMI/SCL, TU_RXMO/SDA, SIR_MI/RDS_CLK, SIR_MO/RDS_DATA

PAGE 11(A8)

TO PREOUT

CN9 C125Z2-17P

PRESW2, PREGND, PRESBR, PREGND, PRESBL, PREGND, PRESR, PREGND, PRESL, PREGND, PRESW, PREGND, PREC, PREGND, PREFR, PREGND, PREFL

PAGE 11(A5)

TO PREOUT

CN10 C125Z2-15P

Z2R, PREGND, Z2L, PREGND, Z2R, PREGND, Z2L, PREGND, DVR_REC_R, PREGND, DVR_REC_L, PREGND, VCR_REC_R, PREGND, VCR_REC_L

PAGE 11(A7)

TO PREOUT

CP13A 20010WR-13

AC MUTE DET, X2 VOL DET, DA +5V, TRG 15V, TRG GND, A+8V, A-8V, AGND, AGND, TU 3.3/5V/9V, TU_RTGND, RL +B, RL GND

REG_SIRIUS_COMMON_CNT
PAGE 5(B4)

ANALOG AUDIO SIGNAL LINE

SCHEMATIC DIAGRAMS (3/39)

FRONT CONNECTOR

REG_SIRIUS_COMMON CNT 3/4

HDMI B'D
PAGE 33(D7)

HDMI B'D
PAGE 33(D3)

HDMI B'D
PAGE 33(D5)

HDMI B'D
PAGE 33(H6)

HDMI BD
PAGE 33(H7)

HDMI B'D
PAGE 33(H4)

CP107
C125Z1-13P

CP105
C125Z1-15

CP106
C125Z1-17P

CP113
C125Z1-13P

CP 112
C125Z1-17P

VIDEO B'D
PAGE 13(A11)

VIDEO B'D
PAGE 13(A8)

VIDEO B'D
PAGE 13(A10)

CP111
C12EZ1-19

CP108
C125Z1-19P

CP109
C125Z1-17P

CP110
C125Z1-33P

CP114
C12EZ1-13P

CP115
C125Z1-33P

PAGE 9(K1)

TO A_AUDIO
PAGE 9(H1)

R134 SHORT
R135 SHORT
R136 SHORT
R137 SHORT
R138 SHORT

J103A OPEN
J102A OPEN
J101A OPEN

R139 OPEN
R140 OPEN
R141 OPEN
R142 OPEN
R143 OPEN

R144 0

VIDEO-5V
VIDEO_GND
VIDEO_GND
VIDEO+5V

CP13B
OPEN

CN102
OPEN

CN103
OPEN

CN104
C125Z2-27P

CN105
OPEN

PREOUT B'D
PAGE 10(L9)

COMPONENT (Y) SIGNAL LINE

VIDEO SIGINAL LINE

S (Y) VIDEO SIGINAL LINE

SCHEMATIC DIAGRAMS (4/39)

REG_SIRIUS_COMMON CNT 4/4

SIRIUS/RS232C/TRIGGER

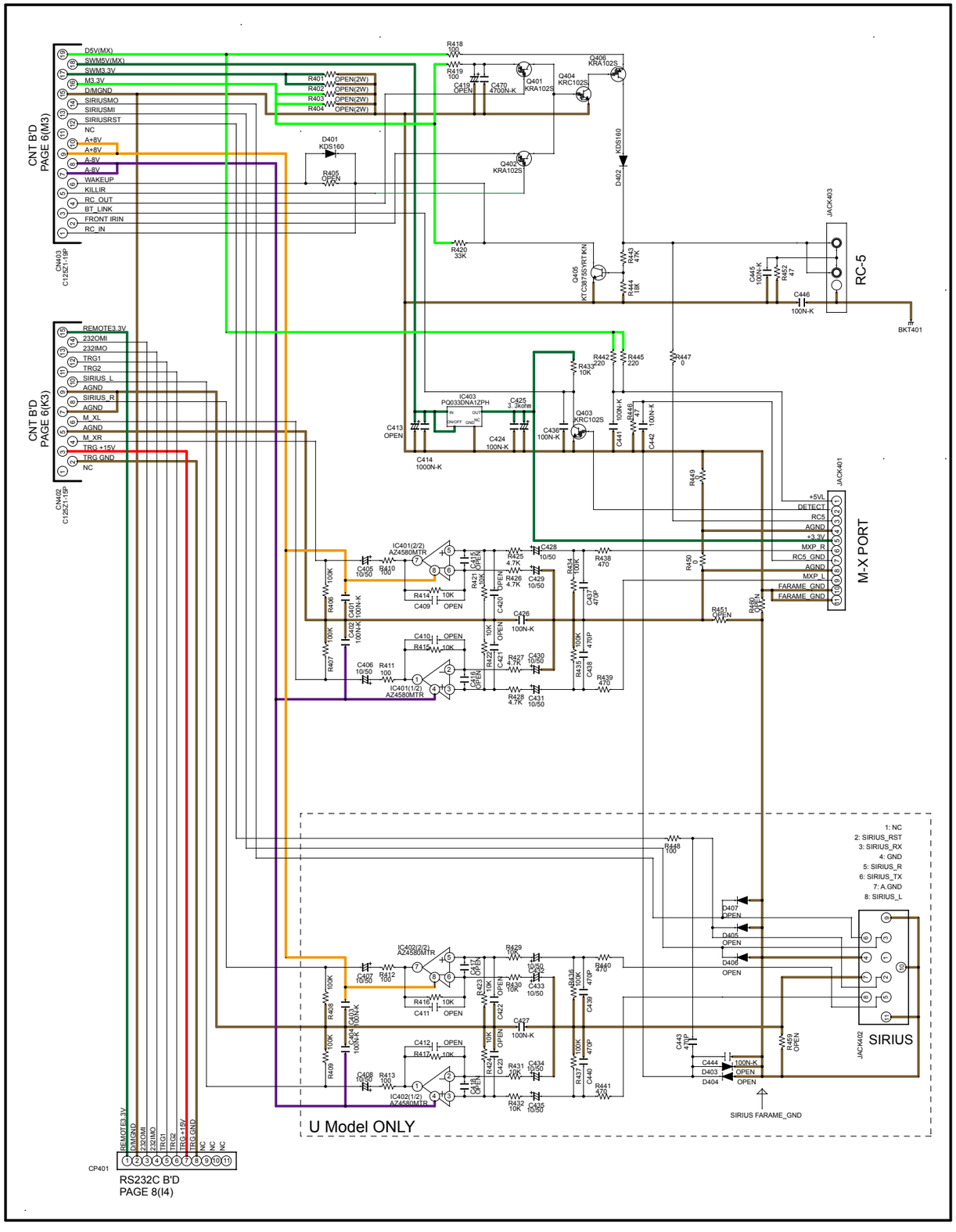

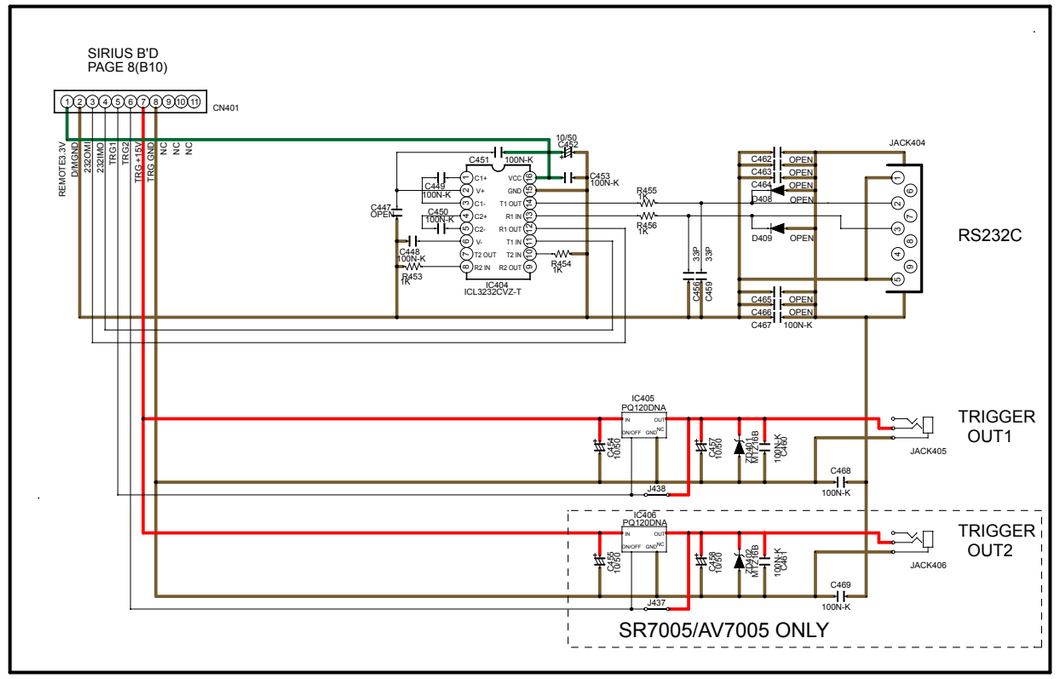

AUDIO 1/1

REG_SIRIUS_CNT 2/4_H6

REG_SIRIUS_CNT 3/4_H5

REG_SIRIUS_CNT 3/4_J5

REG_SIRIUS_CNT 2/4_K6

REG_SIRIUS_CNT 2/4_M6

AUDIO IN

EXT.IN

IC3003
R2A15220FP

1/4_F1
HDAM_AMP_UNIT

1/4_E1
HDAM_AMP_UNIT

ANALOG AUDIO SIGNAL LINE

⚠2 SCHEMATIC DIAGRAMS (6/39)

TO ANALOG TUNER SILICON

TO ANALOG TUNER PANASONIC

MODEL	AV7005			SR7005				SR6005			SR5005			
AREA	U	N	F	U	N	F	K	U	N	F	U	N	F	K
OPTION A	X	X	X	X	X	X	X	X	X	X	O	X	X	X
OPTION B	X	X	O	X	X	O	O	X	X	O	O	X	O	O
OPTION C	X	O	O	X	O	O	O	X	O	O	X	O	O	O
OPTION D	X	O	X	X	O	X	X	X	O	X	X	O	X	X
OPTION E	X	O	O	X	O	O	O	X	O	O	O	O	O	O
OPTION F	X	O	O	X	O	O	O	X	O	O	X	O	O	O

FROM INPUT A3

E3 BALANCE CONNECT_UNIT

REG_SIRIUS_CNT 3/4_G8

FROM CURRENT FEEDBACK

TO CURRENT FEEDBACK

REG_SIRIUS_CNT 2/4_K9

REG_SIRIUS_CNT 2/4_M9

REG_SIRIUS_CNT 2/4_I9

TO TUNER

VCR REC OUT

CDR REC OUT

ANALOG AUDIO SIGNAL LINE

⚠2 SCHEMATIC DIAGRAMS (8/39)

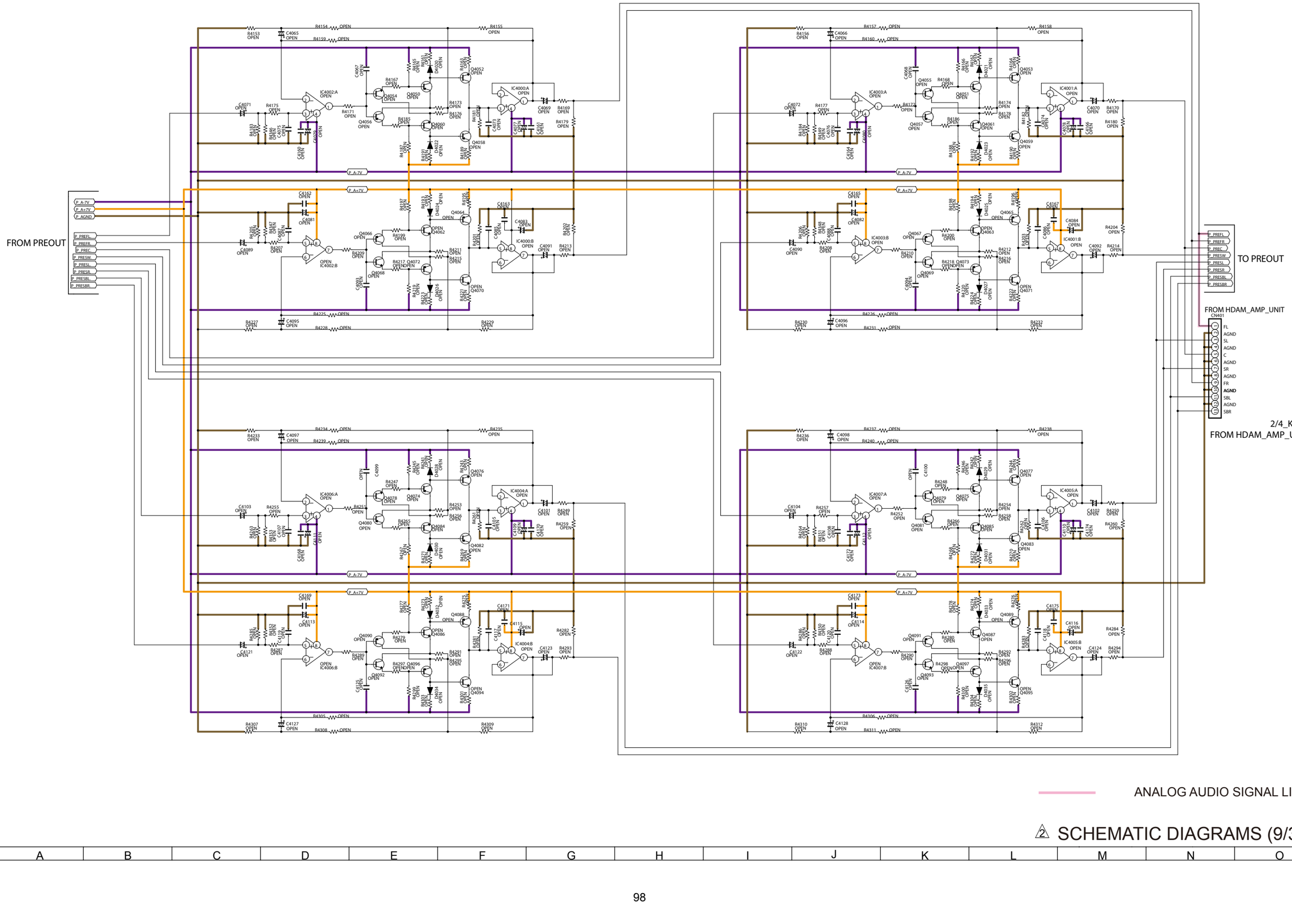

⚠2 SCHEMATIC DIAGRAMS (9/39)

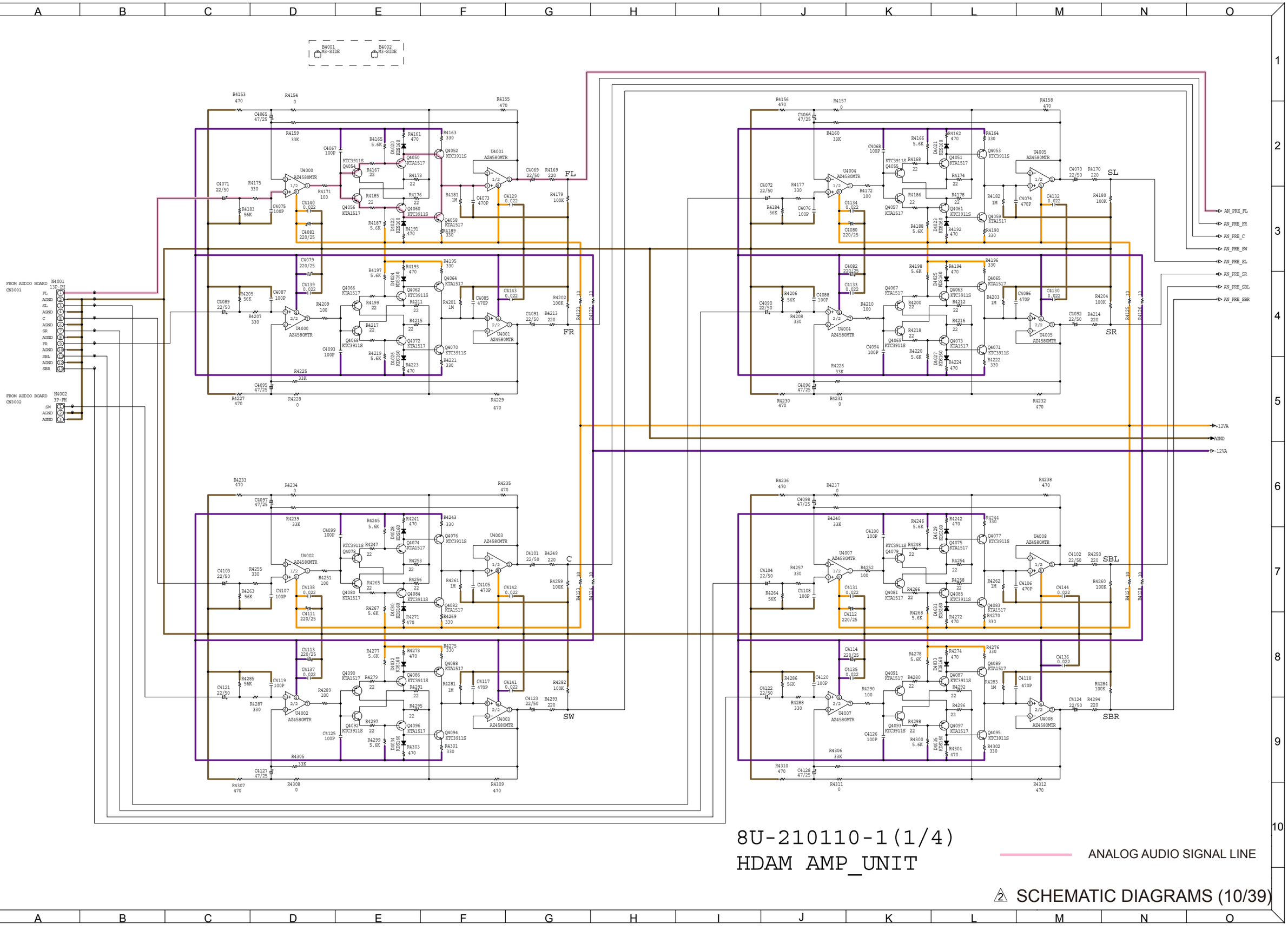

8U-210110-1(1/4)
HDAM AMP_UNIT

ANALOG AUDIO SIGNAL LINE

② SCHEMATIC DIAGRAMS (10/39)

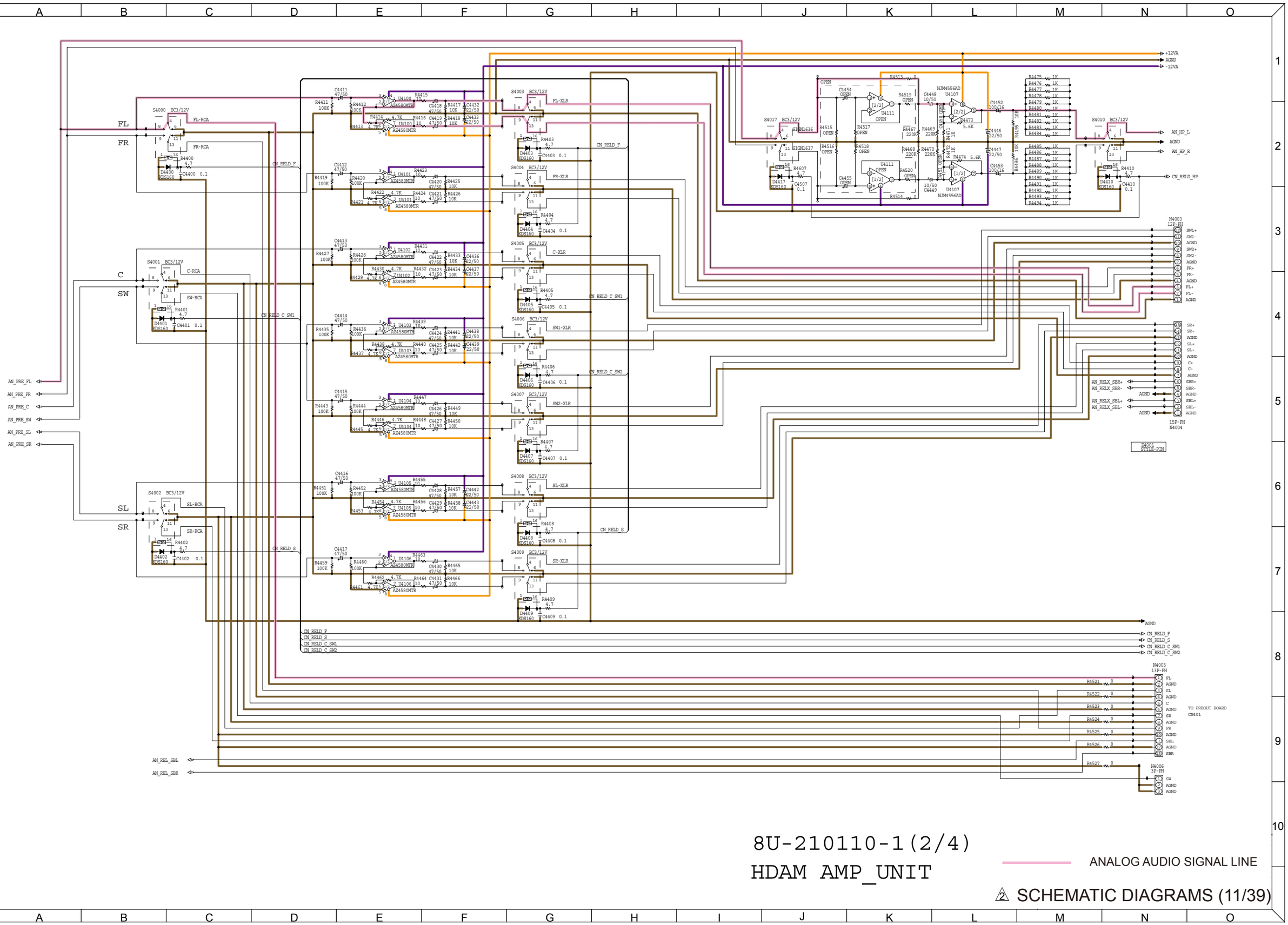
8U-210110-1(2/4)
HDAM AMP_UNIT
ANALOG AUDIO SIGNAL LINE
SCHEMATIC DIAGRAMS (11/39)
FL
FR
C
SW
SL
SR
FL-RCA
FR-RCA
C-RCA
SW-RCA
SL-RCA
SR-RCA
FL-XLR
FR-XLR
C-XLR
SW1-XLR
SW2-XLR
SL-XLR
SR-XLR
CN_RELD_F
CN_RELD_S
CN_RELD_C_SW1
CN_RELD_C_SW2
CN_RELD_HP
AN_PRE_FL
AN_PRE_FR
AN_PRE_C
AN_PRE_SW
AN_PRE_SL
AN_PRE_SR
AN_REL_SBL
AN_REL_SBR
AN_HP_L
AN_HP_R
+12VA
AGND
-12VA
TO PREOUT BOARD
CN401

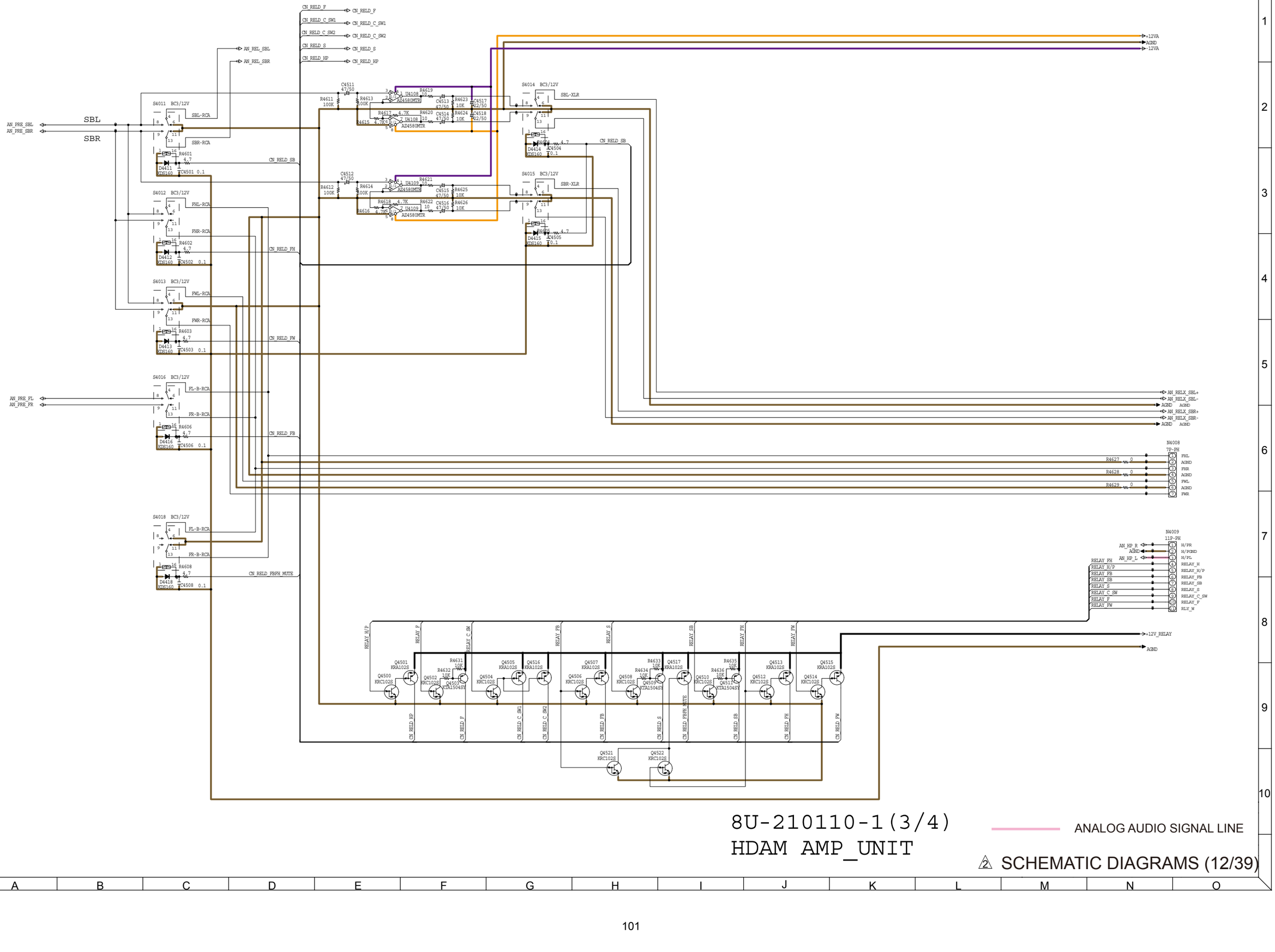

8U-210110-1(3/4)
HDAM AMP_UNIT

ANALOG AUDIO SIGNAL LINE

SCHEMATIC DIAGRAMS (12/39)

F8000/F8010	AV7005
T1.6AL/250V	/U (USA/CANADA)
T1.6AL/250V	/N (EUROPE)
T1.6AL/250V	/F (JAPAN)

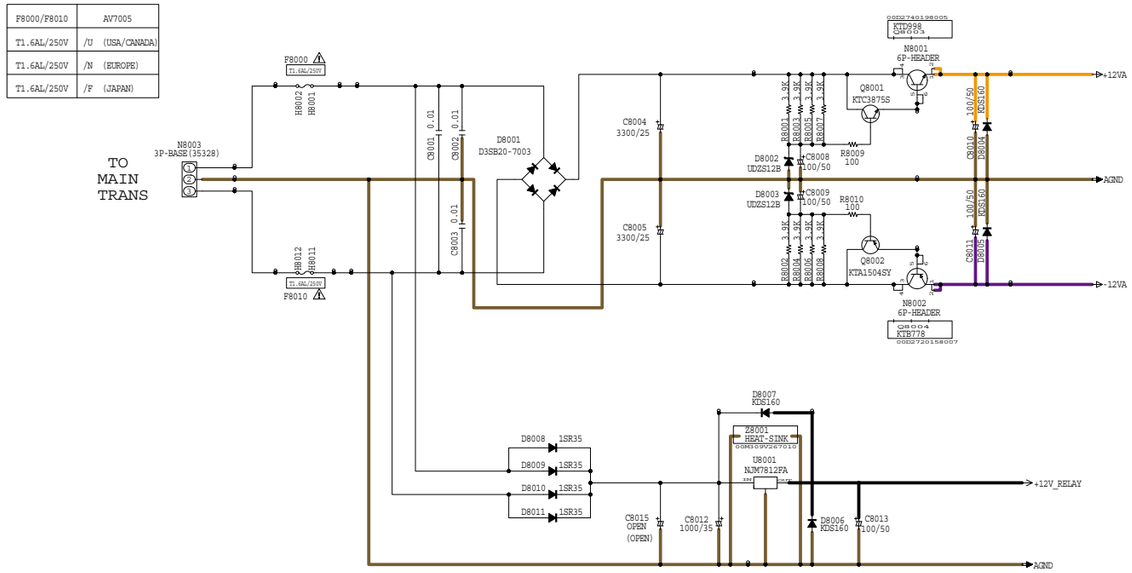

SUPPLY SECTION

8U-210110-1(4/4)
HDAM AMP_UNIT

⚠2 SCHEMATIC DIAGRAMS (13/39)

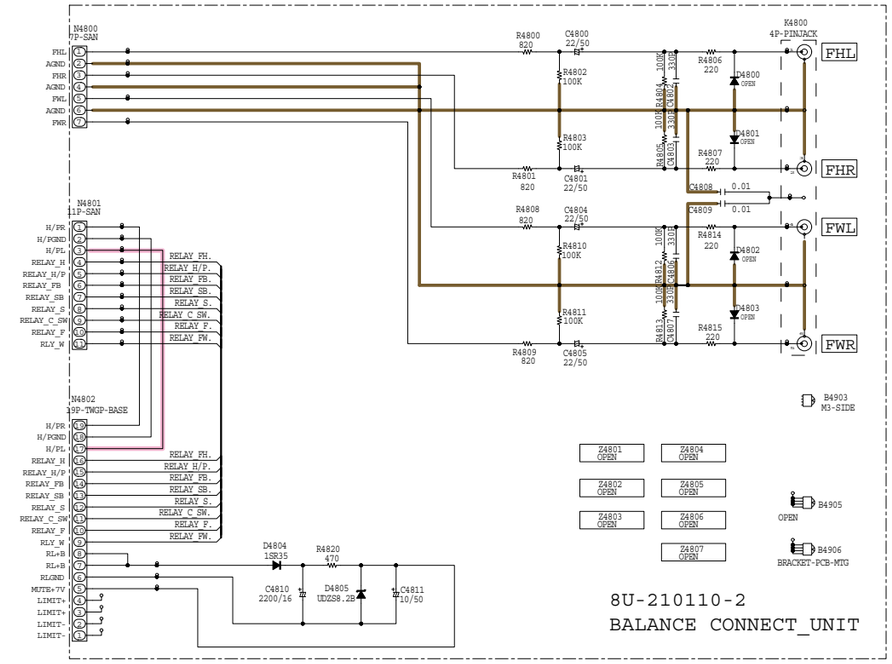

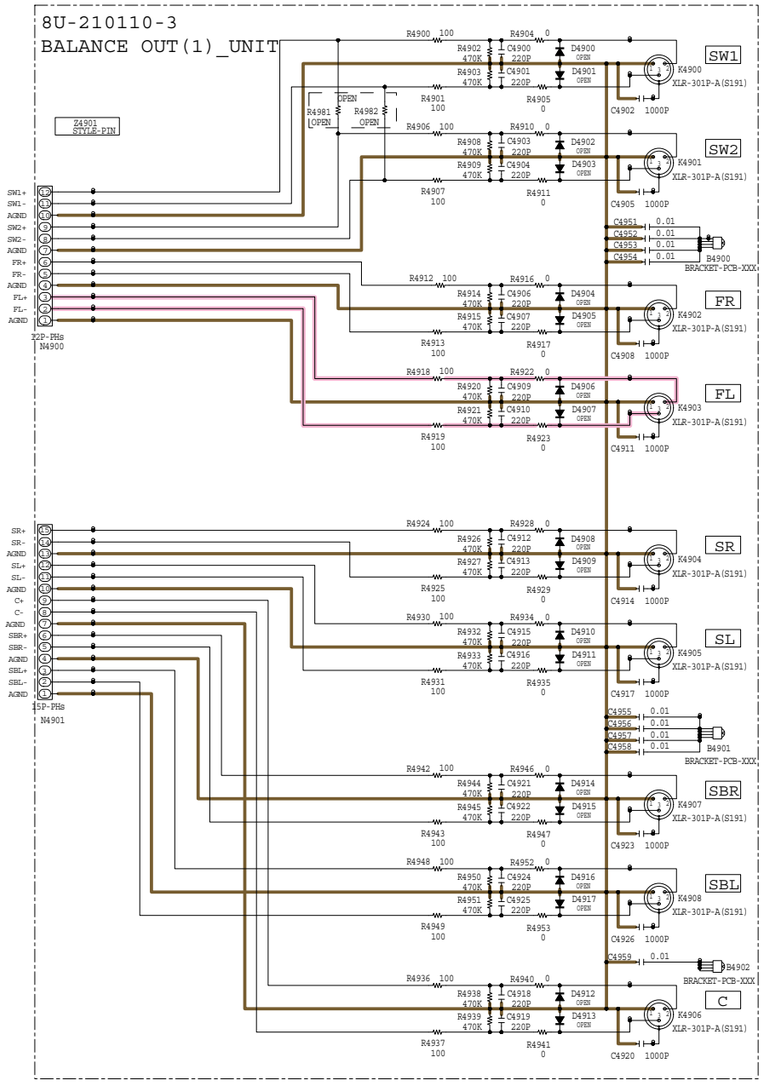

ANALOG AUDIO SIGNAL LINE

⚠2 SCHEMATIC DIAGRAMS (14/39)

	SR7005/ AV7005	SR6005	SR5005
D2001,D2002 D2005,D2006	KDS160	KDS4148U	KDS4148U
C2006-C2008 C2047,C2060 C2068,C2073	10/50	22/16	22/16
C2005	10/50	22/16	22/16
C2069	10/50	OPEN	OPEN
Q2005	DTC114YK	KRC107S	KRC107S

*	SR7005/ AV7005	SR6005	SR5005
R2114	100K	1K	1K
R2122	0	0	OPEN
R2089	OPEN	0	0
R2090	OPEN	0	0
R2130,2131	0	OPEN	OPEN
R2091	OPEN	OPEN	0
R2093	0	0	OPEN
R2092	OPEN	OPEN	75_0.5%

8U-110085(1/3)
A.VIDEO_UNIT

S (Y) VIDEO SIGINAL LINE
VIDEO SIGNAL LINE
COMPONENT (Y) SIGNAL LINE

⚠ SCHEMATIC DIAGRAMS (15/39)

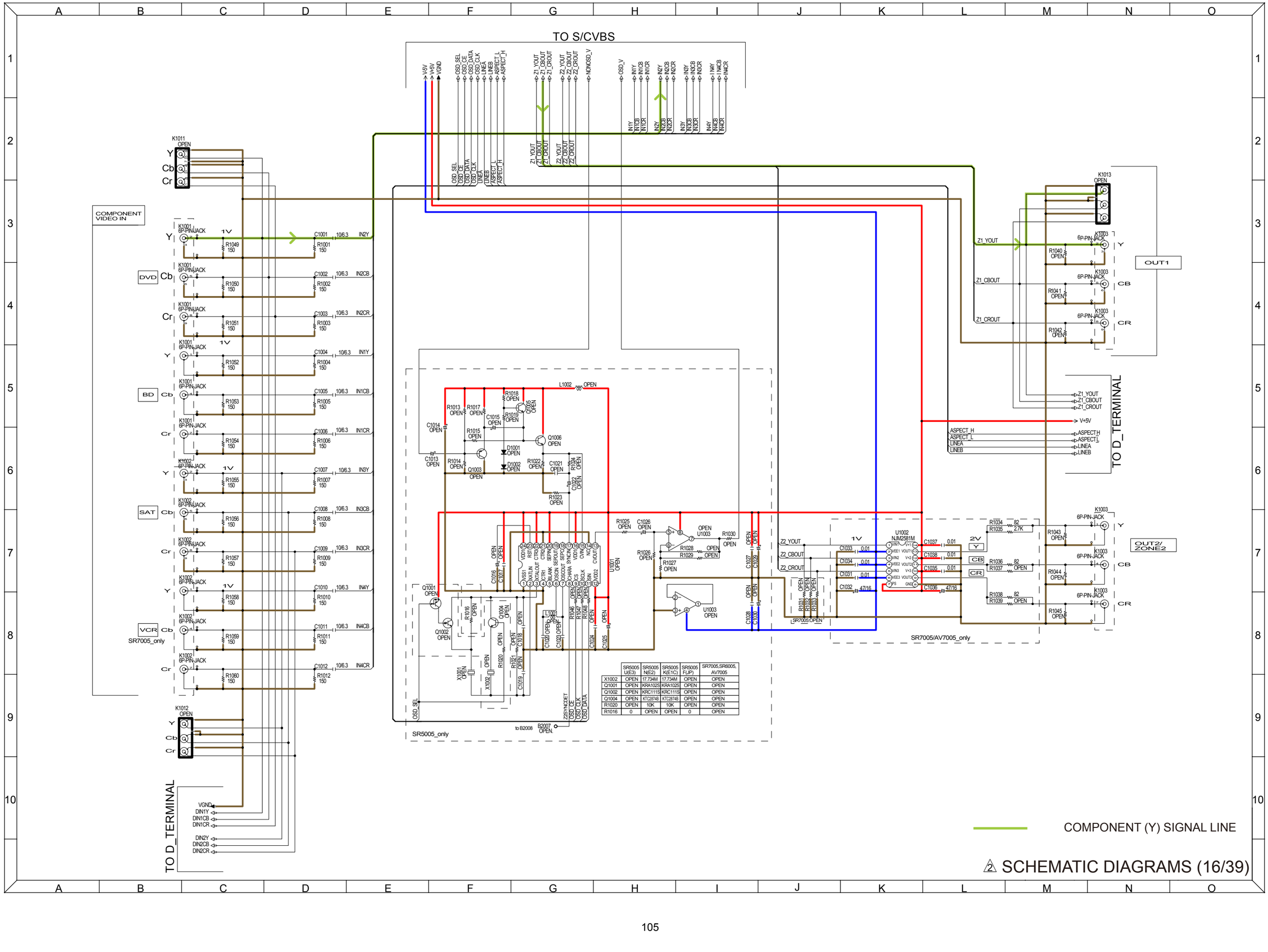

	SR5005 U(E3)	SR5005 N(E2)	SR5005 K(E1C)	SR5005 F(JP)	SR7005,SR6005, AV7005
X1002	OPEN	17.734M	17.734M	OPEN	OPEN
Q1001	OPEN	KRA102S	KRA102S	OPEN	OPEN
Q1002	OPEN	KRC111S	KRC111S	OPEN	OPEN
Q1004	OPEN	KTC2874B	KTC2874B	OPEN	OPEN
R1020	OPEN	10K	10K	OPEN	OPEN
R1016	0	OPEN	OPEN	0	OPEN

SCHEMATIC DIAGRAMS (16/39)

TO COMPONENT

TO COMPONENT

VGND
DIN1Y
DIN1CB
DIN1CR
DIN2Y
DIN2CB
DIN2CR

Z1_YOUT
Z1_CBOUT
Z1_CROUT
V+5V
ASPECT_H
ASPECT_L
LINEA
LINEB

ASPECT_H
ASPECT_L
LINEA
LINEB

N3003
OPEN

Y
Y-G
CB
CB-G
CR
CR-G
LINE1
LINE2
LINE3

MONITOR

MONIL1
MONIL2
MONIL3

N3001
OPEN

DVD

Y
Y-G
CB
CB-G
CR
CR-G
LINE1
LINE2
LINE3

VIN1L1
VIN1L2
VIN1L3

N3002
OPEN

SAT

Y
Y-G
CB
CB-G
CR
CR-G
LINE1
LINE2
LINE3

VIN2L1
VIN2L2
VIN2L3

MONIL1
MONIL3
MONIL2

VIN1L1
VIN2L1
OPEN
R3003
LINEA
LINEB
R3004
OPEN
VIN1L2
VIN2L2
LINEA
LINEB

OPEN
OPEN
C3001
C3002

U3001
OPEN
Y0 VCC Y2 X2 Y1 X1 Y3 X3 Y X0 INH X3 VEE A B VSS
1 2 3 4 5 6 7 8 16 15 14 13 12 11 10 9

OPEN
C3003

U3002
OPEN
Y0 VCC Y2 X2 Y1 X1 Y3 X3 Y X0 INH X3 VEE A B VSS
1 2 3 4 5 6 7 8 16 15 14 13 12 11 10 9

Q3001
OPEN
ASPECT_H

LINE3
R3001
OPEN
R3002
OPEN

ASPECT_L
Q3002
OPEN

BCF=SOP=1.27mm pitch

BCF=SOP=1.27mm pitch

VIN2L3
VIN1L3

JAPAN	LINEA	LINEB	ON CHANNEL	
VIDEO-2	L	L	0X	0Y
MUTE	H	L	1X	1Y
VIDEO-1	L	H	2X	2Y
UP CONVERT	H	H	3X	3Y

⚠2 SCHEMATIC DIAGRAMS (17/39)

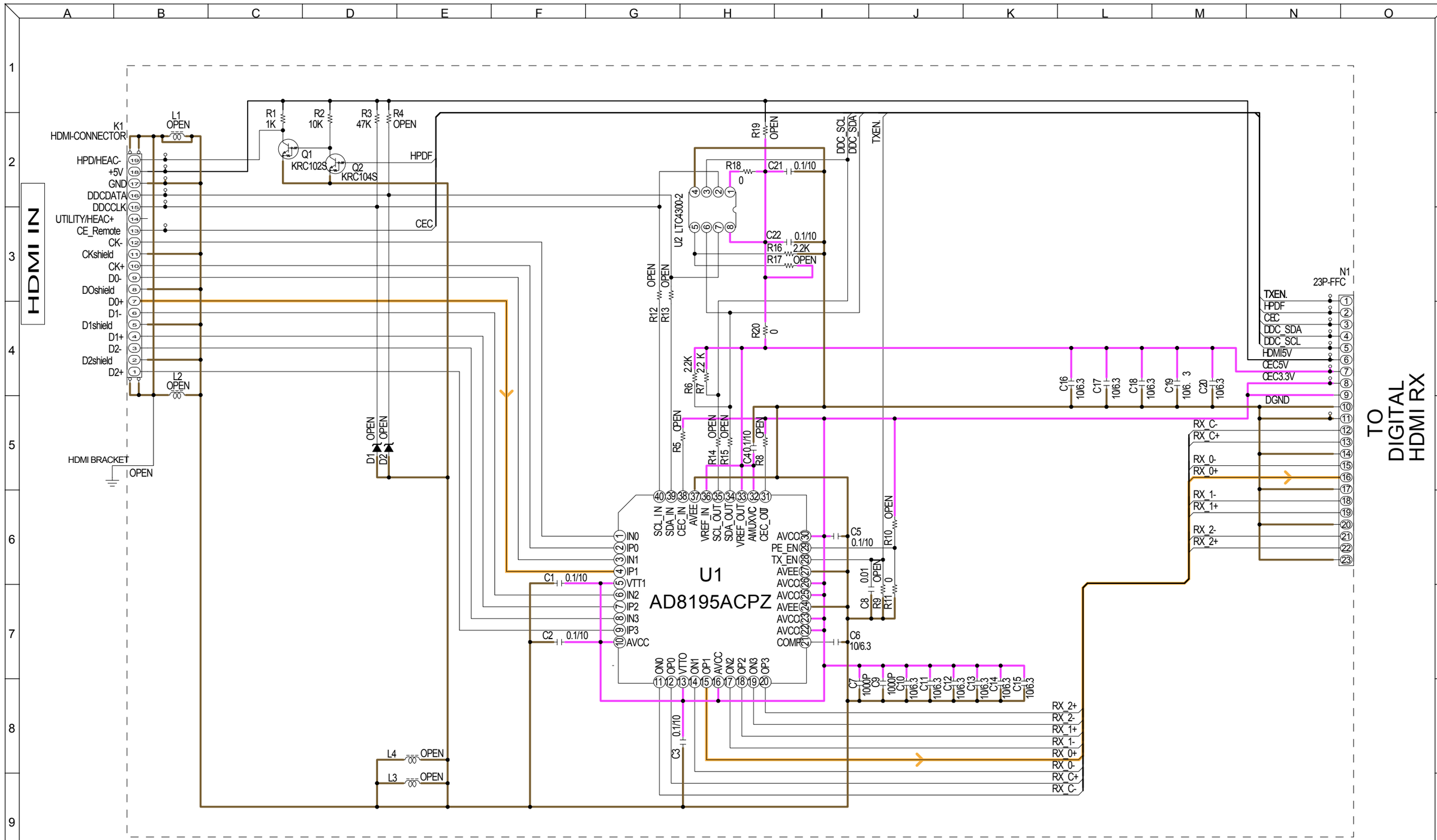

FRONT HDMI

8U-310051(1/21) DIGITAL_UNIT

HDMI/TMDS SIGNAL LINE

SCHEMATIC DIAGRAMS (18/39)

HDMI IN4

HDMI IN5

HDMI IN6

HDMI IN FRONT

SR6005 ONLY

SR7005 ONLY

U1002
ADV3002BSTZ
DEVICE ADDRESS:0x80

TO HDMI RX

8U-310051(2/21)
DIGITAL_UNIT
HDMI SW

HDMI/TMDS SIGNAL LINE

⚠ SCHEMATIC DIAGRAMS (19/39)

HDMI RX

8U-310051(3/21) DIGITAL_UNIT

HDMI/TMDS SIGNAL LINE

DIGITAL VIDEO SIGNIAL LINE

VIDEO SIGNIAL LINE

U1100 ADV7840KBCZ-5

TO SUB CPU

TO HDMI TX

TO GUI FPGA

TO HDMI SW

TO DIGITAL SUPPLY

TO DIGITAL CONNECT

COMPONENT (Y) SIGNAL LINE

S(Y) VIDEO SIGINAL LINE

DIGITAL AUDIO SIGINAL LINE

SCHEMATIC DIAGRAMS (20/39)

TO I/P CONVERTER

INPUT

TO DIGITAL SUPPLY

TO HDMI RX

U1601 XC3S400A-4FGG320C

U1602 IS42S32200E-6TL (64M SD-RAM)

U1603 M25P40-VMN6TP (4M SERIAL FLASH)

U1604 TC74VHCT125AFT

U1605 TC74VHCT125AFT

U1606 TC74VHCT125AFT

U1607 PQ012ENB12ZPH

Q1600 KRC104S

Q1601 KRC102S

	NORMAL	WRITE
GUIWR	L	H
-GUIWR	H	L

GUI
8U-310051(4/21)
DIGITAL_UNIT

TO ENCODER

TO HDMI TX

From SUB uCOM

From MAIN uCOM

DIGITAL VIDEO SIGINAL LINE

SCHEMATIC DIAGRAMS (21/39)

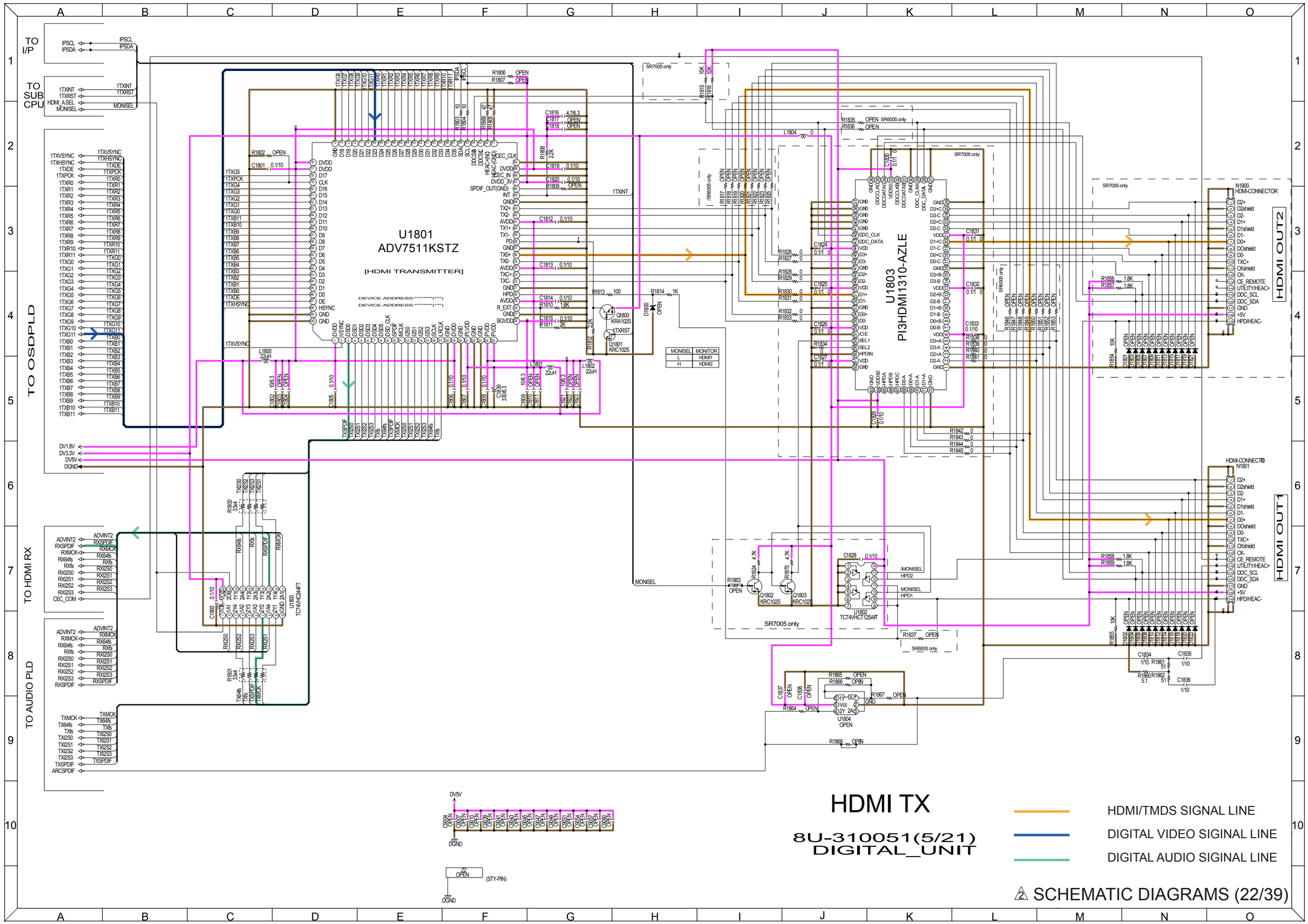
TO I/P
IPSCL
IPSDA
TO SUB CPU
1TXINT
1TXRST
HDMI_A.SEL
MONISEL
TO OSDPLD
TO HDMI RX
TO AUDIO PLD
U1801
ADV7511KSTZ
[HDMI TRANSMITTER]
DEVICE ADDRESS:"----------(***)
DEVICE ADDRESS:"----------(***)
U1803
PI3HDMI1310-AZLE
SR7005 only
SR6005 only
/SR6005 only
N1800
HDMI-CONNECTOR
HDMI OUT2
HDMI-CONNECTOR
N1801
HDMI OUT1
U1800
TC74VHC244FT
U1802
TC74VHCT125AFT
U1804
OPEN
Q1800
KRA102S
Q1801
KRC102S
Q1802
KRC102S
Q1803
KRC102S
D1800
OPEN
MONISEL
MONITOR
L
HDMI1
H
HDMI2
/MONISEL
HPD2
MONISEL
HPD1
DV1.8V
DV3.3V
DV5V
DGND
ADVINT2
RXSPDIF
RXMCK
RX64fs
RXfs
RXI2S0
RXI2S1
RXI2S2
RXI2S3
CEC_COM
TXMCK
TX64fs
TXfs
TXI2S0
TXI2S1
TXI2S2
TXI2S3
TXSPDIF
ARCSPDIF
(STY-PIN)
HDMI TX
8U-310051(5/21)
DIGITAL_UNIT
HDMI/TMDS SIGNAL LINE
DIGITAL VIDEO SIGINAL LINE
DIGITAL AUDIO SIGINAL LINE
SCHEMATIC DIAGRAMS (22/39)

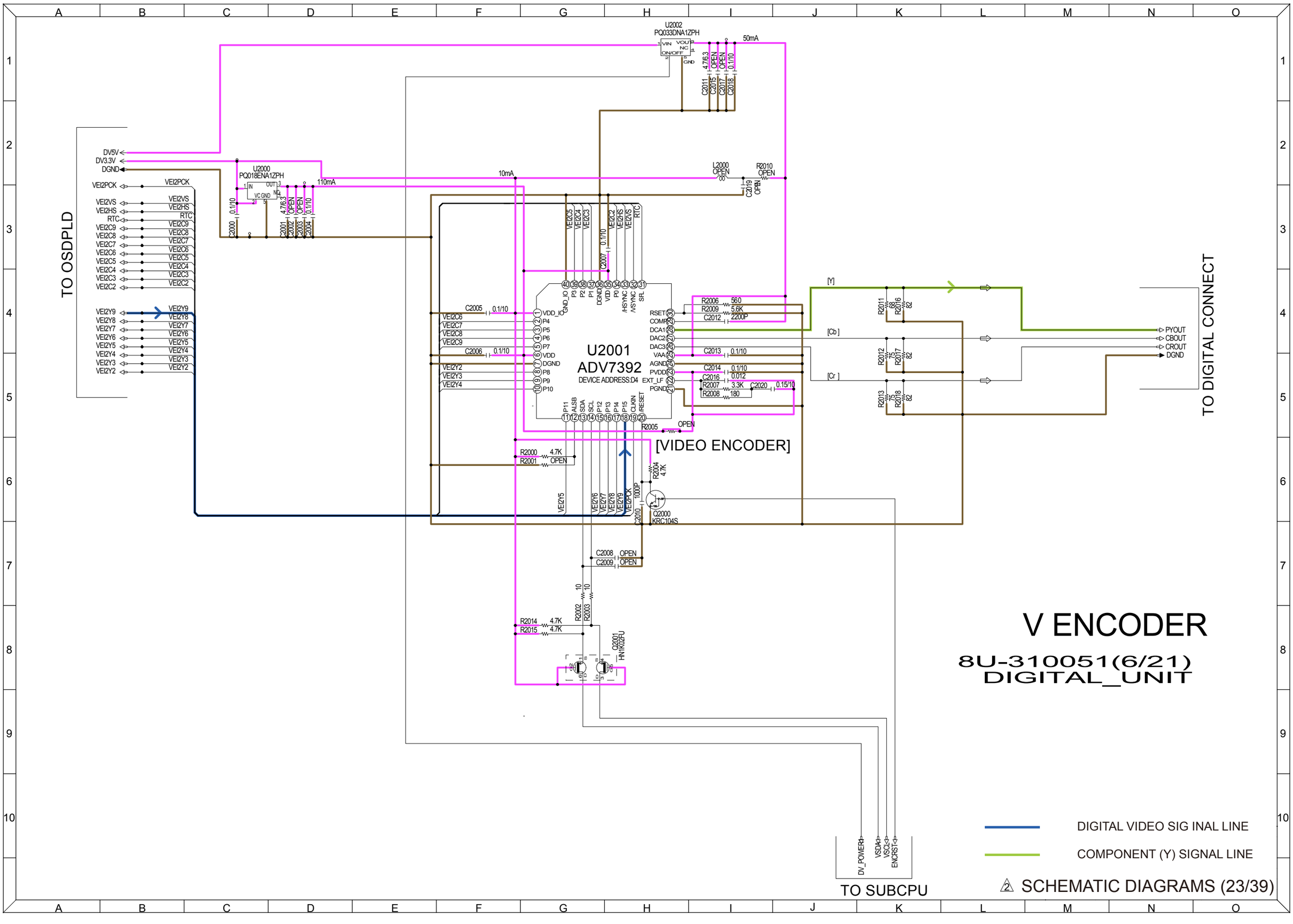
TO OSDPLD
DV5V
DV3.3V
DGND
VEI2PCK
VEI2VS
VEI2HS
RTC
VEI2C9
VEI2C8
VEI2C7
VEI2C6
VEI2C5
VEI2C4
VEI2C3
VEI2C2
VEI2Y9
VEI2Y8
VEI2Y7
VEI2Y6
VEI2Y5
VEI2Y4
VEI2Y3
VEI2Y2
U2002
PQ033DNA1ZPH
50mA
U2000
PQ018ENA1ZPH
110mA
10mA
L2000
OPEN
R2010
OPEN
U2001
ADV7392
DEVICE ADDRESS:D4
[VIDEO ENCODER]
[Y]
[Cb]
[Cr]
PYOUT
CBOUT
CROUT
DGND
TO DIGITAL CONNECT
Q2000
KRC104S
Q2001
HN1K02FU
TO SUBCPU
DV_POWER
VSDA
VSCL
ENCRST
V ENCODER
8U-310051(6/21)
DIGITAL_UNIT
DIGITAL VIDEO SIG INAL LINE
COMPONENT (Y) SIGNAL LINE
SCHEMATIC DIAGRAMS (23/39)

TO HDMI TX

TO OSDPLD

TO DDR

U2200 ABT2015BG316

I/P
8U-310051(7/21)
DIGITAL_UNIT

DIGITAL VIDEO SIGINAL LINE

Trace Length for DDR Loop OUt to In
=DDR CLK Length + DDR DQS Length.

⚠2 SCHEMATIC DIAGRAMS (24/39)

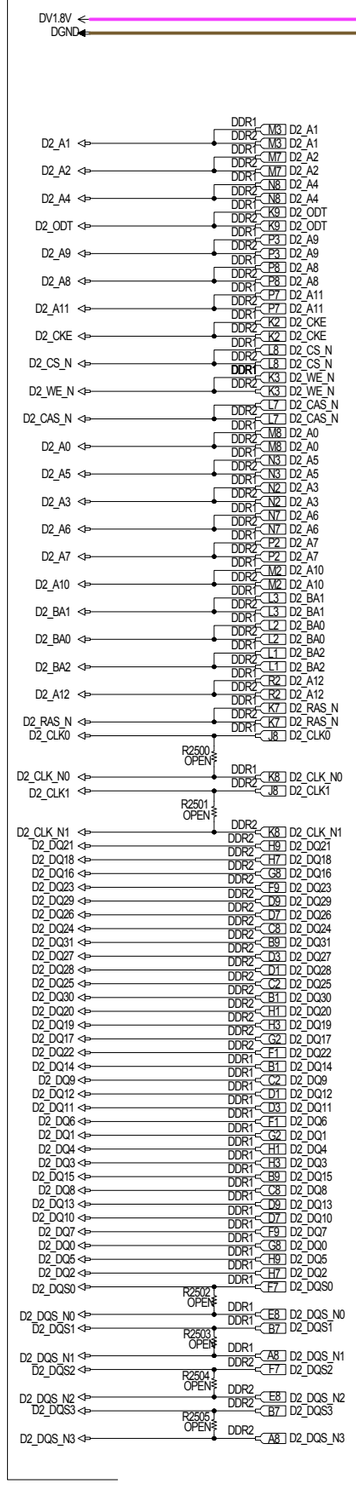

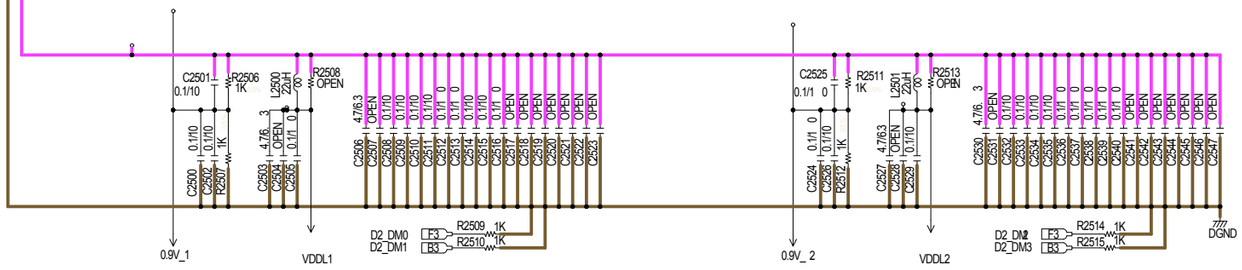

A1 1 DV1.8V	A2 2	A3 3 DGND				A7 7 DGND	A8 8 D2_DQS_N1	A9 9 DV1.8V
B1 10 D2_DQ14	B2 11 DGND	B3 12 D2_DM1				B7 16 D2_DQS1	B8 17 DGND	B9 18 D2_DQ15
C1 19 DV1.8V	C2 20 D2_DQ9	C3 21 DV1.8 V				C7 25 DV1.8V	C8 26 D2_DQ8	C9 27 DV1.8V
D1 28 D2_DQ12	D2 29 DGND	D3 30 D2_DQ11				D7 34 D2_DQ10	D8 35 DGND	D9 36 D2_DQ13
E1 37 DV1.8V	E2 38	E3 39 DGND				E7 43 DGND	E8 44 D2_DQS_N0	E9 45 DV1.8V
F1 46 D2_DQ6	F2 47 DGND	F3 48 D2_DM0				F7 52 D2_DQS0	F8 53 DGND	F9 54 D2_DQ7
G1 55 DV1.8V	G2 56 D2_DQ1	G3 57 DV1.8 V				G7 61 DV1.8V	G8 62 D2_DQ0	G9 63 DV1.8V
H1 64 D2_DQ4	H2 65 DGND	H3 66 D2_DQ3				H7 70 D2_DQ2	H8 71 DGND	H9 72 D2_DQ5
J1 73 VDDL1	J2 74 0.9V_1	J3 75 DGND				J7 79 DGND	J8 80 D2_CLK0	J9 81 DV1.8V
	K2 83 D2_CKE	K3 84 D2_WE_N				K7 88 D2_RAS_N	K8 89 D2_CLK_N0	K9 90 D2_ODT
L1 91 D2_BA2	L2 92 D2_BA0	L3 93 D2_BA1				L7 97 D2_CAS_N	L8 98 D2_CS_N	
	M2 101 D2_A10	M3 102 D2_A1				M7 106 D2_A2	M8 107 D2_A0	M9 108 DV1.8V
N1 109 DGND	N2 110 D2_A3	N3 111 D2_A5				N7 115 D2_A6	N8 116 D2_A4	
	P2 119 D2_A7	P3 120 D2_A9				P7 124 D2_A11	P8 125 D2_A8	P9 126 DGND
R1 127 DV1.8V	R2 128 D2_A12	R3 129				R7 133	R8 134	

U2500 DDR1
K4T51163QI-HCE7

A1 1 DV1.8V	A2 2	A3 3 DGND				A7 7 DGND	A8 8 D2_DQS_N3	A9 9 DV1.8V
B1 10 D2_DQ30	B2 11 DGND	B3 12 D2_DM3				B7 16 D2_DQS3	B8 17 DGND	B9 18 D2_DQ31
C1 19 DV1.8V	C2 20 D2_DQ25	C3 21 DV1.8 V				C7 25 DV1.8V	C8 26 D2_DQ24	C9 27 DV1.8V
D1 28 D2_DQ28	D2 29 DGND	D3 30 D2_DQ27				D7 34 D2_DQ26	D8 35 DGND	D9 36 D2_DQ29
E1 37 DV1.8V	E2 38	E3 39 DGND				E7 43 DGND	E8 44 D2_DQS_N2	E9 45 DV1.8V
F1 46 D2_DQ22	F2 47 DGND	F3 48 D2_DM2				F7 52 D2_DQS2	F8 53 DGND	F9 54 D2_DQ23
G1 55 DV1.8V	G2 56 D2_DQ17	G3 57 DV1.8 V				G7 61 DV1.8 V	G8 62 D2_DQ16	G9 63 DV1.8 V
H1 64 D2_DQ20	H2 65 DGND	H3 66 D2_DQ19				H7 70 D2_DQ18	H8 71 DGND	H9 72 D2_DQ21
J1 73 VDDL2	J2 74 0.9V_ 2	J3 75 DGND				J7 79 DGND	J8 80 D2_CLK1	J9 81 DV1.8V
	K2 83 D2_CKE	K3 84 D2_WE_N				K7 88 D2_RAS_N	K8 89 D2_CLK_N1	K9 90 D2_ODT
L1 91 D2_BA2	L2 92 D2_BA0	L3 93 D2_BA1				L7 97 D2_CAS_N	L8 98 D2_CS_N	
	M2 101 D2_A10	M3 102 D2_A1				M7 106 D2_A2	M8 107 D2_A0	M9 108 DV1.8 V
N1 109 DGND	N2 110 D2_A3	N3 111 D2_A5				N7 115 D2_A6	N8 116 D2_A4	
	P2 119 D2_A7	P3 120 D2_A9				P7 124 D2_A11	P8 125 D2_A8	P9 126 DGND
R1 127 DV1.8V	R2 128 D2_A12	R3 129				R7 133	R8 134	

U2501 DDR2
K4T51163QI-HCE7

I/P DDR

8U-310051(8/21)
DIGITAL_UNIT

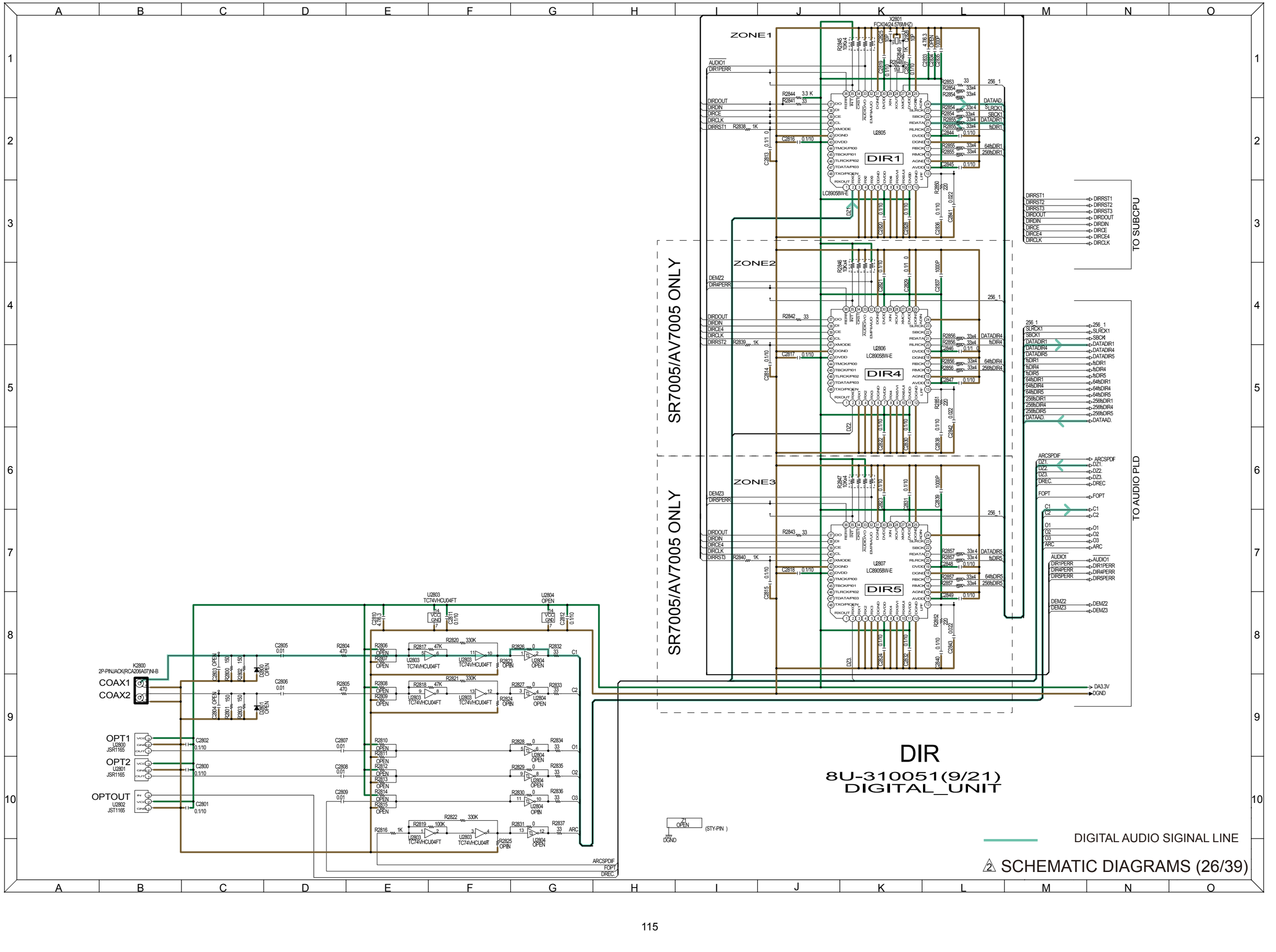

DIR

8U-310051(9/21) DIGITAL_UNIT

TO NET PHY

TO SUB CPU

TO HDMI TX

TO DIR

U3000

EPM240T100C5N

SR7005_ONLY

U3001
CS2100-10-CZZR

TO DIGITAL SUPPLY

TO DIGITAL CONNECT

TO DSP

TO MAINDAC

TO ZONE DAC

DIGITAL AUDIO SIGINAL LINE

AUDIO PLD

8U-310051(10/21)
DIGITAL_UNIT

SCHEMATIC DIAGRAMS (27/39)

TO AUDIO PLD

TO SUBCPU

U3200

ADSP21367KSWZ2A

U3201

W9864G2IH-6

DSP

8U-310051(11/21)

DIGITAL_UNIT

DIGITAL AUDIO SIGINAL LINE

SCHEMATIC DIAGRAMS (28/39)

TO AUDIO PLD

TO SUB CPU

TO DIGITAL CONNECT

MAIN DAC

8U-310051(12/21)

DIGITAL_UNIT

DIGITAL AUDIO SIGINAL LINE

ANALOG AUDIO SIGNAL LINE

SCHEMATIC DIAGRAMS (29/39)

ZONE DAC

8U-310051(13/21)
DIGITAL_UNIT

TO AUDIO PLD

DEMZ2 DEMZ3 64fsDIR4 DATADIR4 fsDIR4 256fsZ2 DACMUTEZ2 64fsDIR5 DATADIR5 fsDIR5 256fsZ3 DACMUTEZ3 DGND DA+5V

C3804 0.1/10 C3805 OPEN

ZONE2 DAC

SR7005/AV7005_only

C3800 1/10 U3800 AK4424ET C3802 1/10 C3806 4.7/6.3 R3800 10

DEMZ2 256fsZ2 64fsDIR4 DATADIR4 fsDIR4 DACMUTEZ2

1 CN VEE 16
2 CP VSS2 15
3 DEM CVDD 14
4 MCLK DZF 13
5 BICK VSS1 12
6 SDTI VDD 11
7 LRCK AOUTL 10
8 SMUTE AOUTR 9

C3807 4.7/6.3

R3805 1.5K — Z2L — C3810 2200P — R3806 100K

R3802 1.5K — Z2R — C3811 2200P — R3807 100K

DAZ2L DAZ2R DAZ3L DAZ3R DAGND

ZONE3 DAC

SR7005/AV7005_only

C3801 1/10 U3801 AK4424ET C3803 1/10 C3808 4.7/6.3 R3801 10

DEMZ3 256fsZ3 64fsDIR5 DATADIR5 fsDIR5 DACMUTEZ3

1 CN VEE 16
2 CP VSS2 15
3 DEM CVDD 14
4 MCLK DZF 13
5 BICK VSS1 12
6 SDTI VDD 11
7 LRCK AOUTL 10
8 SMUTE AOUTR 9

C3809 4.7/6.3

R3803 1.5K — Z3L — C3812 2200P — R3808 100K

R3804 1.5K — Z3R — C3813 2200P — R3809 100K

DAZ2L DAZ2R DAZ3L DAZ3R DAGND

TO DIGITAL CONNECT

DM860

8U-310051(14/21) DIGITAL_UNIT

SCHEMATIC DIAGRAMS (31/39)

TO DM860

TO DIGITAL SUPPLY TO AUDIO PLD

TO DIGITAL CONNECT

TO Front USB UNIT

ETHERNET

TO MAINCPU

U4202 LAN8700

U4203 SAA7121

U4204 MFI341S21614

U4205

U4200 microSMD175F

U4201 PULSE-TRANS BELFUSE

Q4200 FDC608PZ

Q4201 KRC102S

Q4202 OPEN.

Q4203 OPEN

N4200 RJ-45-JACK

N4201 5P-PH

ETHERNET PHY

8U-310051(15/21) DIGITAL_UNIT

⚠2 SCHEMATIC DIAGRAMS (32/39)

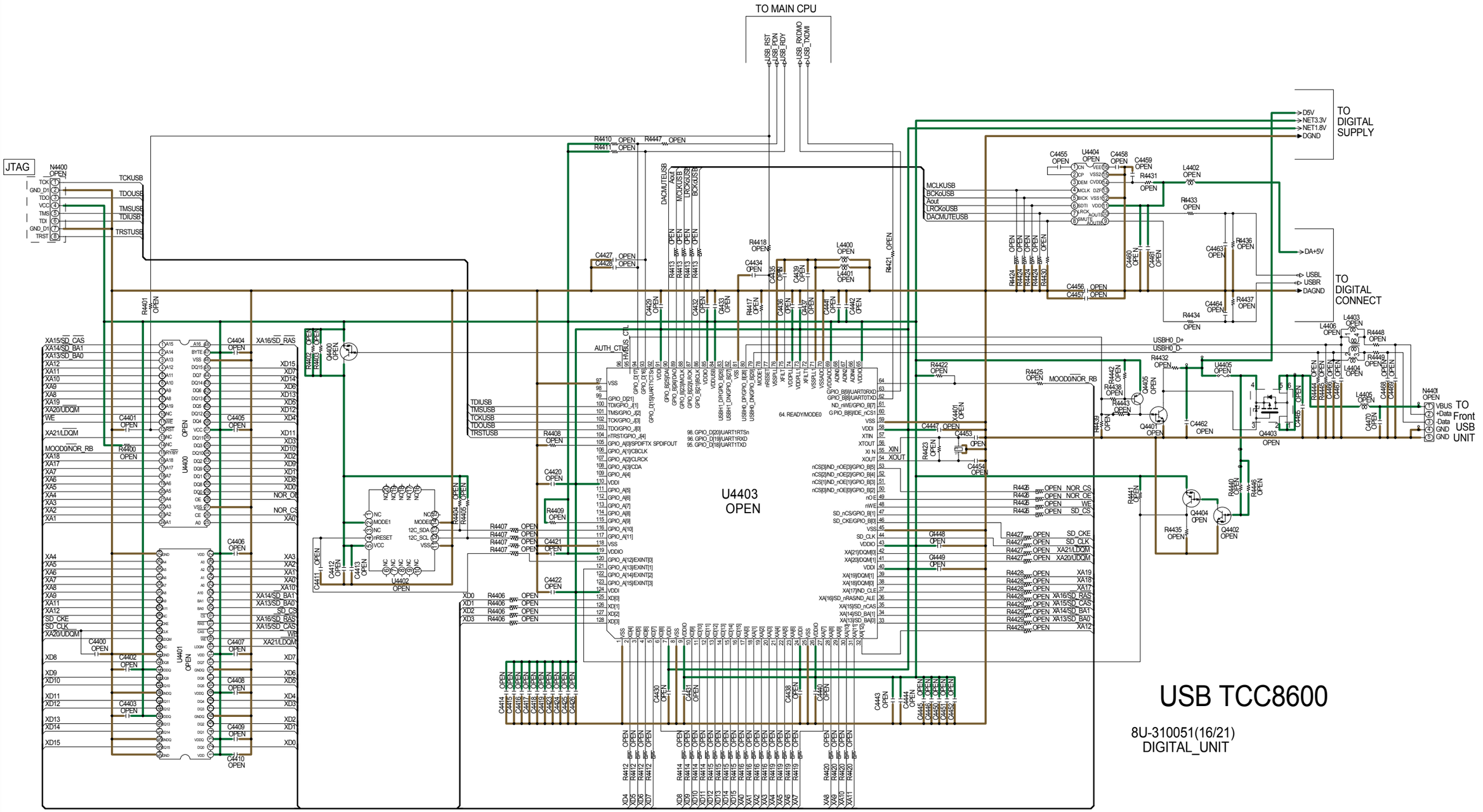
TO MAIN CPU
USB_RST
USB_PDN
USB_RDY
USB_RXDM0
USB_TXDM0
JTAG
N4400
OPEN
TCK
GND_D1
TDO
VCC
TMS
TDI
GND_D1
TRST
TCKUSB
TDOUSB
TMSUSB
TDIUSB
TRSTUSB
MCLKUSB
BCKoUSB
Aout
LRCKoUSB
DACMUTEUSB
D5V
NET3.3V
NET1.8V
DGND
TO DIGITAL SUPPLY
DA+5V
USBL
USBR
DAGND
TO DIGITAL CONNECT
USBH0_D+
USBH0_D-
MOODD/NOR_RB
XA15/SD_CAS
XA14/SD_BA1
XA13/SD_BA0
XA12
XA11
XA10
XA9
XA8
XA19
XA20/UDQM
WE
XA21/LDQM
XA18
XA17
XA7
XA6
XA5
XA4
XA3
XA2
XA1
XA16/SD_RAS
XD15
XD7
XD14
XD6
XD13
XD5
XD12
XD4
XD11
XD3
XD10
XD2
XD9
XD1
XD8
XD0
NOR_OE
NOR_CS
XA0
XA10
XA14/SD_BA1
XA13/SD_BA0
SD_CS
XA16/SD_RAS
XA15/SD_CAS
WE
XA21/LDQM
SD_CKE
SD_CLK
XA20/UDQM
AUTH_CTL
U4403
OPEN
U4400
U4401
U4402
U4404
U4405
TO Front USB UNIT
VBUS
+Data
-Data
GND
GND
USB TCC8600
8U-310051(16/21)
DIGITAL_UNIT
SCHEMATIC DIAGRAMS (33/39)

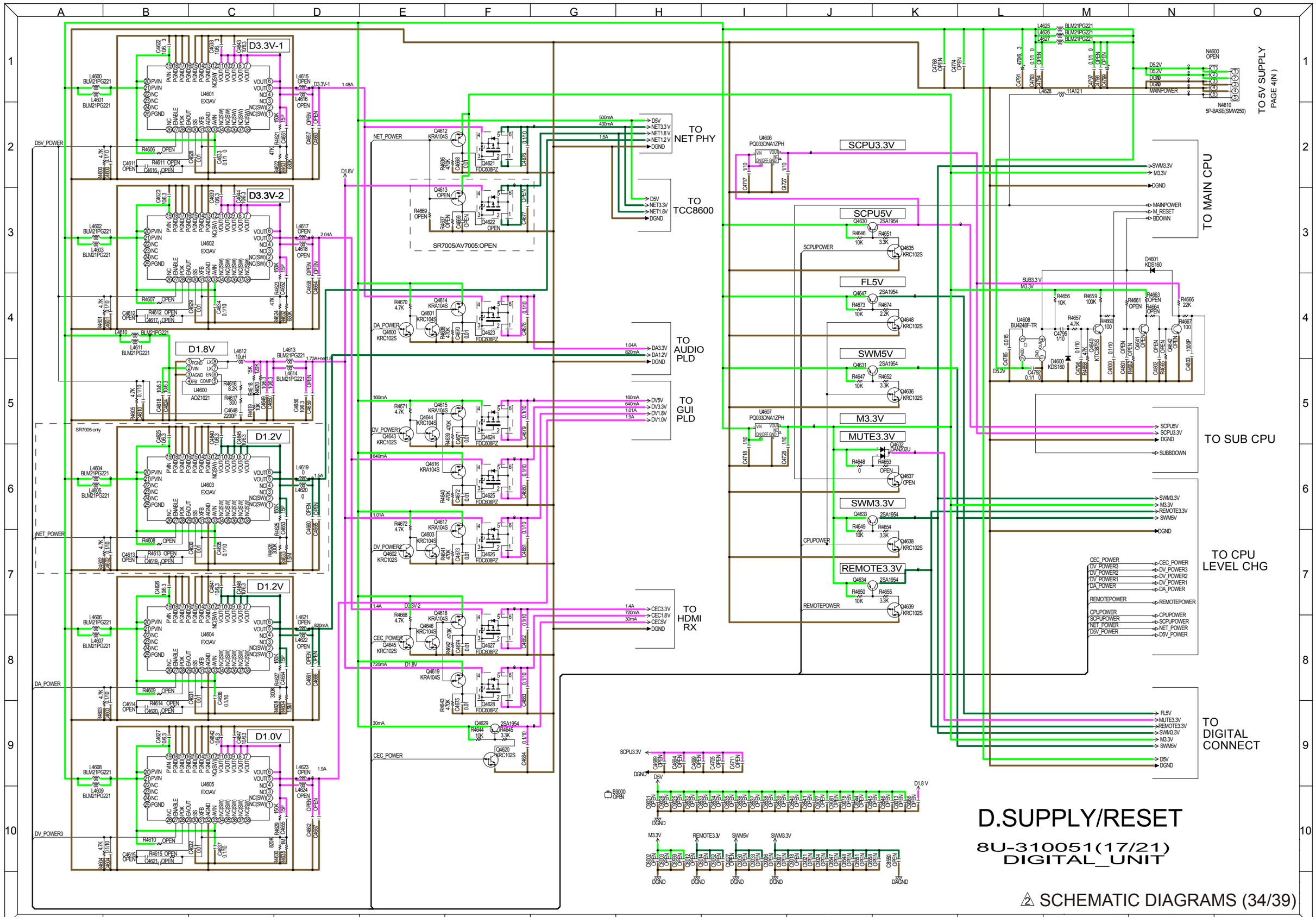
D.SUPPLY/RESET
8U-310051(17/21)
DIGITAL_UNIT
SCHEMATIC DIAGRAMS (34/39)
TO NET PHY
TO TCC8600
TO AUDIO PLD
TO GUI PLD
TO HDMI RX
TO 5V SUPPLY PAGE 4(N)
TO MAIN CPU
TO SUB CPU
TO CPU LEVEL CHG
TO DIGITAL CONNECT
D3.3V-1
D3.3V-2
D1.8V
D1.2V
D1.2V
D1.0V
SCPU3.3V
SCPU5V
FL5V
SWM5V
M3.3V
MUTE3.3V
SWM3.3V
REMOTE3.3V

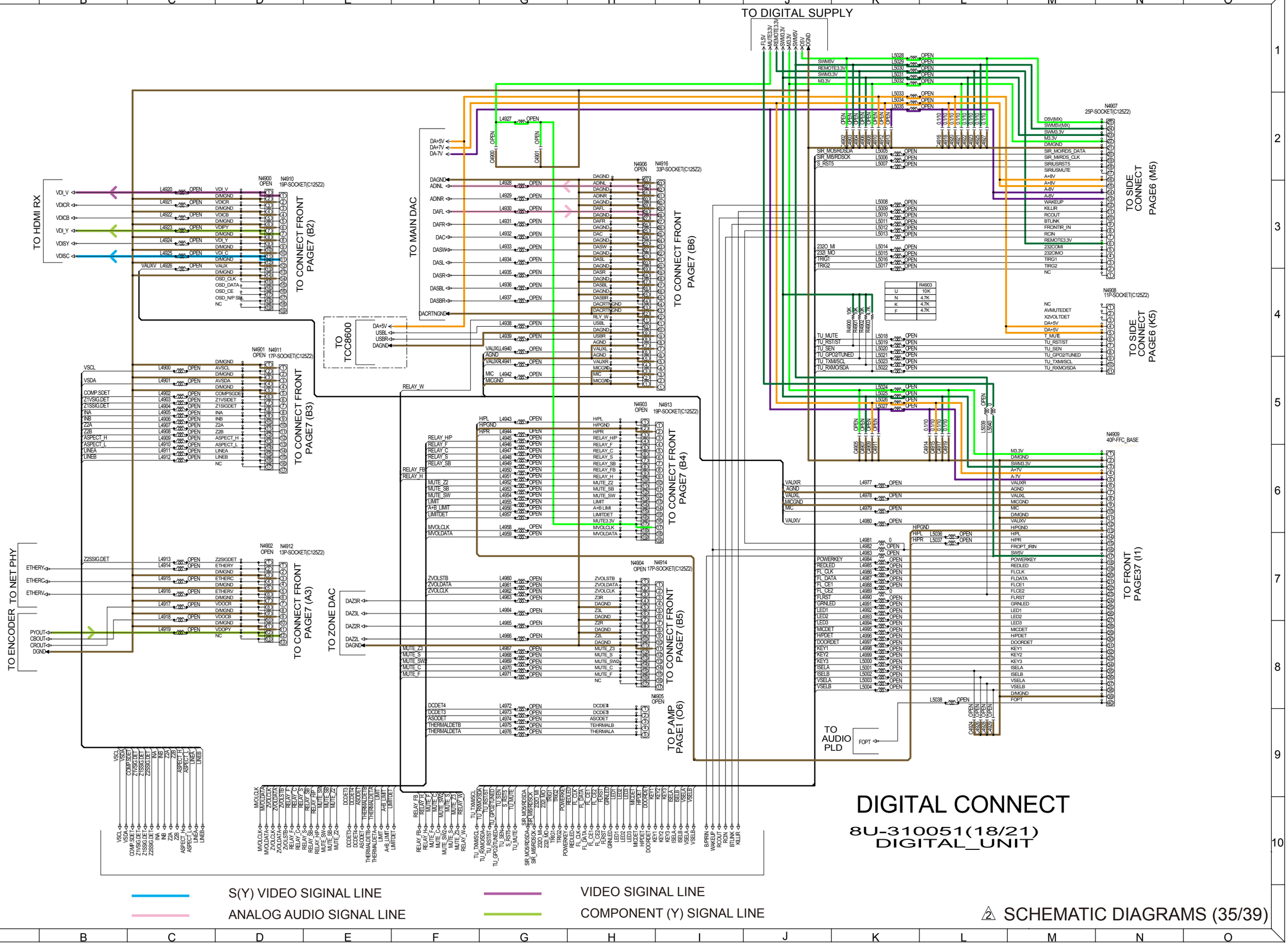
TO DIGITAL SUPPLY
TO HDMI RX
TO CONNECT FRONT PAGE7 (B2)
TO MAIN DAC
TO TCC8600
TO CONNECT FRONT PAGE7 (B6)
TO SIDE CONNECT PAGE6 (M5)
TO SIDE CONNECT PAGE6 (K5)
TO CONNECT FRONT PAGE7 (B3)
TO CONNECT FRONT PAGE7 (B4)
TO ENCODER
TO NET PHY
TO CONNECT FRONT PAGE7 (A3)
TO ZONE DAC
TO CONNECT FRONT PAGE7 (B5)
TO P.AMP PAGE1 (O6)
TO AUDIO PLD
TO FRONT PAGE37 (I1)
DIGITAL CONNECT
8U-310051(18/21)
DIGITAL_UNIT
S(Y) VIDEO SIGNAL LINE
ANALOG AUDIO SIGNAL LINE
VIDEO SIGNAL LINE
COMPONENT (Y) SIGNAL LINE

TO DIGITAL CONNECT

TO DIGITAL SUPPLY

TO SUB CPU

TO MAIN CPU

SR6005:OPEN

AV7005:OPEN

	SIRIUS	RDS
AV7005U	O	X
AV7005N	X	O
SR7005U	O	X
SR7005N	X	O
SR6005U	O	X
SR6005N	X	O

	R5111	R5112
U	OPEN	33
N	33	OPEN
F	OPEN	OPEN
K	OPEN	OPEN

CPU_LEVEL_CHG

8U-310051(19/21) DIGITAL_UNIT

SCHEMATIC DIAGRAMS (36/39)

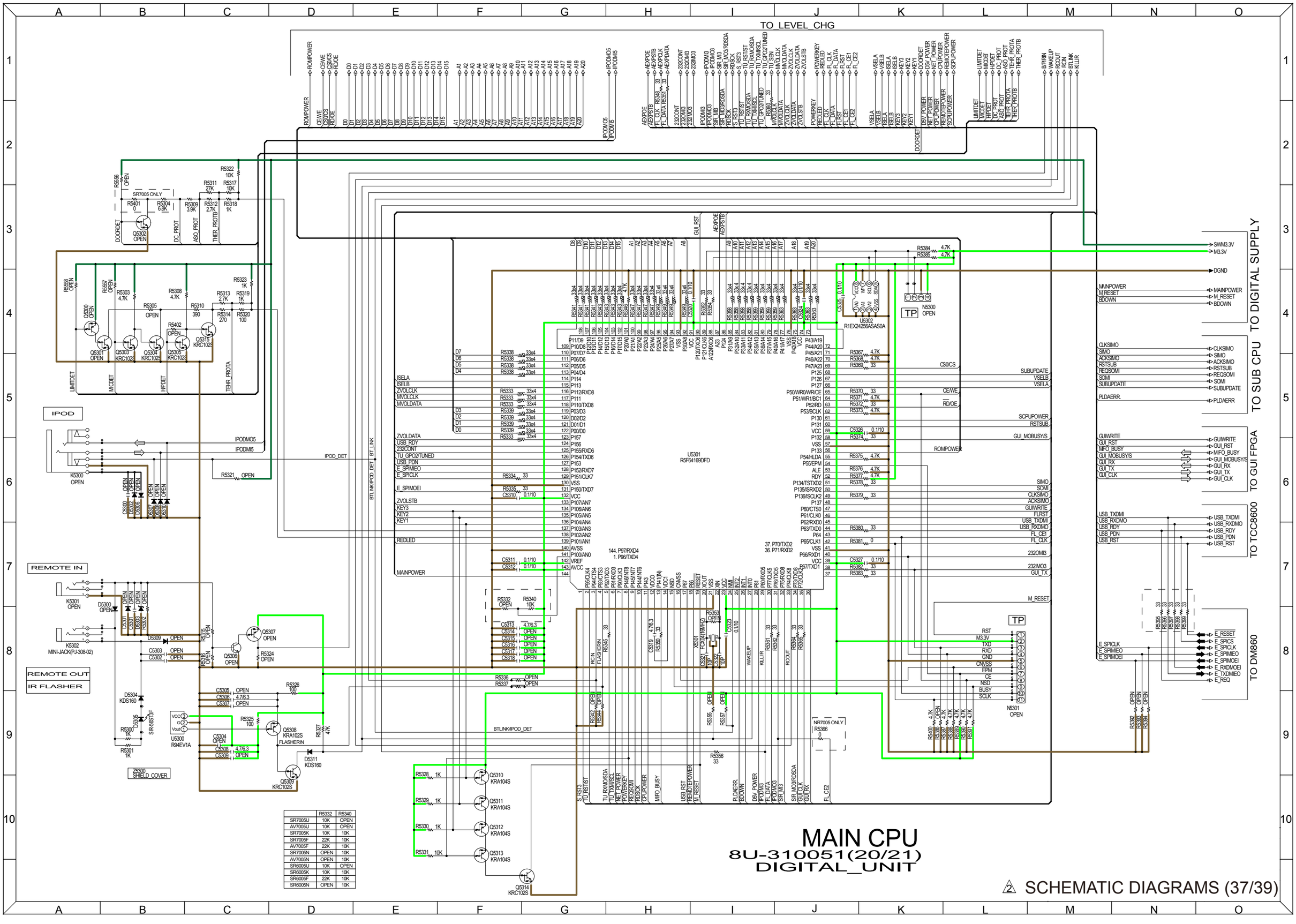

	R5332	R5340
SR7005U	10K	OPEN
AV7005U	10K	OPEN
SR7005K	10K	10K
SR7005F	22K	10K
AV7005F	22K	10K
SR7005N	OPEN	10K
AV7005N	OPEN	10K
SR6005U	10K	OPEN
SR6005K	10K	10K
SR6005F	22K	10K
SR6005N	OPEN	10K

TO HDMI RX

TO GUI PLD

TO HDMI TX

TO VIDEO ENCODER

TO DIGITAL SUPPLY

TO AUDIO PLD

TO DSP

TO DIR

TO MAIN DAC

TO CPU LEVEL CHG

TO MAIN CPU

U5500
R5F3650KNFB
(SUB)

8U-310051(21/21)
DIGITAL_UNIT

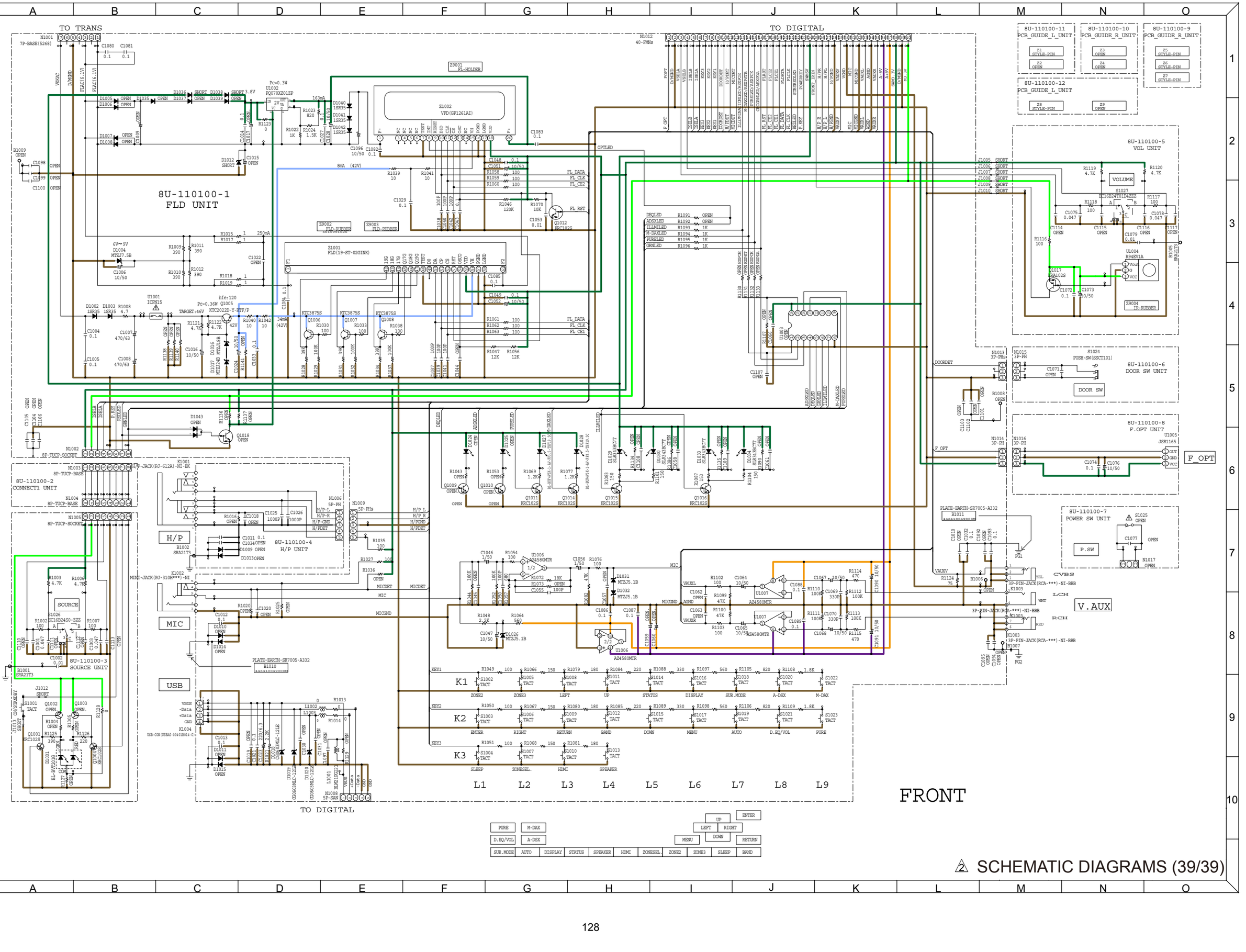
TO TRANS
TO DIGITAL
8U-110100-1
FLD UNIT
8U-110100-2
CONNECT1 UNIT
8U-110100-3
SOURCE UNIT
8U-110100-4
H/P UNIT
8U-110100-5
VOL UNIT
8U-110100-6
DOOR SW UNIT
8U-110100-7
POWER SW UNIT
8U-110100-8
F.OPT UNIT
8U-110100-9
PCB_GUIDE_R_UNIT
8U-110100-10
PCB_GUIDE_R_UNIT
8U-110100-11
PCB_GUIDE_L_UNIT
8U-110100-12
PCB_GUIDE_L_UNIT
H/P
MIC
USB
SOURCE
V.AUX
F_OPT
DOOR SW
P.SW
VOLUME
CVBS
LCH
RCH
K1
K2
K3
L1
L2
L3
L4
L5
L6
L7
L8
L9
FRONT
SCHEMATIC DIAGRAMS (39/39)

WIRING DIAGRAM

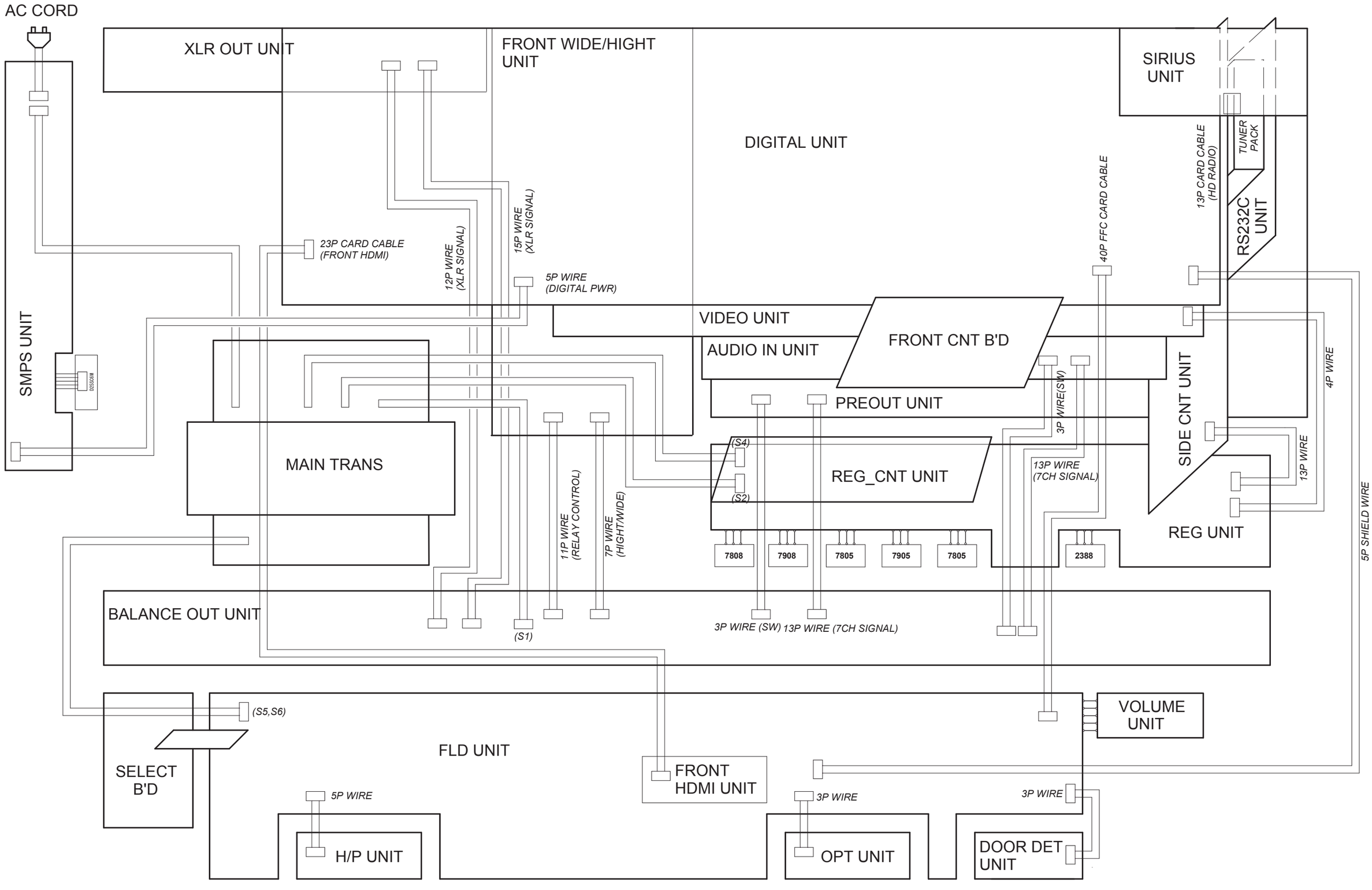

EXPLODED VIEW ⚠2

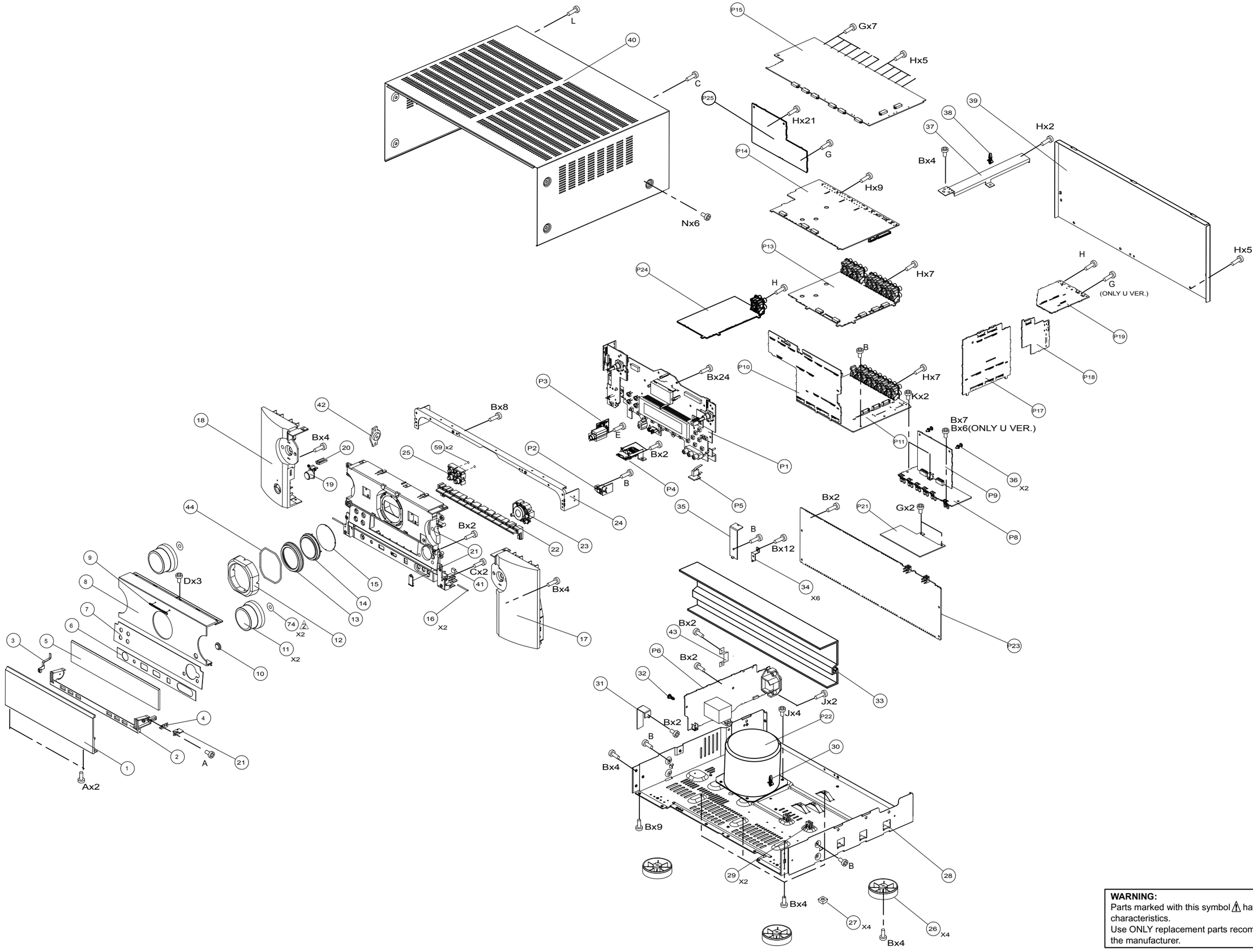

WARNING:
Parts marked with this symbol ⚠ have critical characteristics.
Use ONLY replacement parts recommended by the manufacturer.

PARTS LIST OF EXPLODED VIEW

＊Parts for which "nsp" is indicated on this table cannot be supplied.
＊P.W.B. ASS'Y for which "nsp" is indicated on this table cannot be supplied. When repairing the P.W.B. ASS'Y, check the board parts table and order replacement parts.
＊Part indicated with the mark " ★ " is not illustrated in the exploded view.
＊The parts listed below are for maintenance only, might differ from the parts used in the unit in appearances or dimensions.

Note: The symbols in the column "Remarks" indicate the following destinations.
U1B : North America model N1B : Europe model

	Ref. No.	Part No.	Part Name	Remarks	Q'ty	New
	A	nsp	FRONT UNIT ASSY		1	
	P1	-	FRONT UNIT ASSY			
	P1-1	-	FLD UNIT			
	P1-2	-	VR CONNECT UNIT			
	P1-3	-	VOLUME UNIT			
	P1-5	-	SELECTOR UNIT			
	P2	-	OPT UNIT			
	P3	-	H/P UNIT			
	P5	-	DOORDET			
	P21	-	GUIDE TOP UNIT		1	
	P14	nsp	VIDEO UNIT ASSY		1	
	B	nsp	REG/CNT UNIT	U1B		
	B	nsp	REG/CNT UNIT	N1B		
	P8	-	REG UNIT		1	
	P9	-	REG-CNT UNIT		1	
	P10	-	FRONT CNT UNIT		1	
	P17	-	SIDE-CNT UNIT		1	
	P18	-	RS232C UNIT		1	
	P19	-	SIRIUS UNIT		1	
	C	nsp	SPK/SMPS UNIT ASSY	U1B		
	C	nsp	SPK/SMPS UNIT ASSY	N1B		
	P6	-	SMPS UNIt		1	
	D	8U-310051D	DIGITAL UNIT ASSY	U1B		⚠2⚠3
	D	-	DIGITAL UNIT ASSY	N1B		
	P4	-	FRONT HDMI UNIT		1	
	P15	-	DIGITAL UNIT		1	
	E	nsp	A.AUDIO UNIT ASSY	U1B		
	E	nsp	A.AUDIO UNIT ASSY	N1B		
	P11	-	INPUT UNIT		1	
	P13	-	A.AUDIO UNIT(N)		1	

NOTE : ⚠2

Please change the parts when changing AV7005U1B (8U-310051D) to other destination. (Please refer to the table below)
Please refer to parts 124, 125,126 page. (SCHEMATIC DIAGRAMS : 35/39, 36/39, 37/39)

※ When you replace the DIGITAL UNIT ASSY (8U-310051D), you need software updates.
Refer to "VERSION UPGRADE PROCEDURE OF FIRMWARE (26 - 36 page) .

Please update the following procedure.
1. First, Please update by DFW (33 - 36 page).
2. Next, Please update the latest firmware by DPMS (26 - 32 page).

	R4903(35/39)	R5111(36/39)	R5112(36/39)	C5109(36/39)	U5105(36/39)	R5332(37/39)	R5340(37/39)
AV7005U1B	10K	OPEN	33	0.1µ	TC74VHCT08AFT	10K	OPEN
AV7005N1B	4.7K	33	OPEN	OPEN	OPEN	OPEN	10K

	Ref. No.	Part No.	Part Name	Remarks	Q'ty	New
	F	nsp	BALANCE OUT UNIT	U1B		
	F	nsp	BALANCE OUT UNIT	N1B		*
	P23	-	HDAM AMP UNIT		1	*
	P24	-	XLR CONNECT UNIT		1	
	P25	-	BALANCE OUT UNIT		1	
⚠	P22	101010086003S	POWER TRANS(7005U)	U1B	1	*
⚠	P22	101010087006S	POWER TRANS(7005N)	N1B	1	*
	1	415410023103M	DOOR BL SR7005 A332		1	
	2	417510015008M	HINGE DOOR BL SR7005 A332		1	
	3	nsp	SPRING DOOR SR7005 A332		1	
	4	nsp	BRACKET DOOR SR7005 A332		1	
	5	422510037109M	COVER DOOR INNER BL SR7005 A332		1	
	6	422510036205M	PLATE JACK BL SR7005 A332		1	
	7	416510048104M	WINDOW DOOR (BL) SR7005 A332		1	
	8	402410157000M	FRONT PANEL AV7005 (U) A332	U1B	1	*
	8	402410157017M	FRONT PANEL AV7005 (N) A332	N1B	1	*
	9	421410006004M	MARANTZ BADGE (AL) FOR M1 MODEL		1	
	10	481510019100M	LENS IR BL SR7005 A332		1	
	11	412410057008M	KNOB BL SR7005 A332		2	
	12	481510018107M	LENS RING SR7005 A332		1	
	13	424410019009M	RING CENTER BL SR7005 A332		1	
	14	416510046009M	WINDOW CENTER SR7005 A332		1	
	15	416510047101M	WINDOW FILTER SR7005 A332		1	
	16	nsp	SHAFT DOOR SR7005 A332		2	
	17	402510146009M	ESCUTCHEON R BL SR7005 A332		1	
	18	402510145006M	ESCUTCHEON L BL SR7005 A332		1	
	19	411510021005M	BUTTON BL		1	
	20	481510020001M	LENS STANDBY SR7005 A332		1	
	21	443510045107M	FRONT INNER PANEL BL SR7005 A332		1	
	22	411510122007M	BUTTON 11KEY BL SR7005 A332		1	
	23	411510121004M	BUTTON CURSOR BL SR7005 A332		1	
	24	nsp	STAY FRONT SR7005 A332		1	
	25	411510120001M	BUTTON 4KEY BL SR7005 A332		1	
	26	nsp	LEG		4	
	27	nsp	BUSH SCREW		4	
	28	nsp	CHASSIS MAIN SR7005 A332		1	*
	29	nsp	SUPPORT PCB SR7005 A332		2	
	30	nsp	PWB HOLDER		1	
	31	nsp	BRACKET SMPS PCB SR7005 A332		1	
	32	nsp	P.W.B.HOLDER (H=10)		1	
	33	nsp	HEAT SINK SR7005 A332		1	
	34	nsp	BRACKET AMP PCB SR7005 A332		6	
	35	nsp	BRACKET HEAT SINK SR7005 A332		1	
	36	nsp	CARD SPACER(L=10)		2	
	37	nsp	BRACKET HDMI PCB SR7005 A332		1	
	38	nsp	SUPPORT PWB		1	
	39	nsp	REAR PANEL AV7005 (U) A332	U1B	1	*
	39	nsp	REAR PANEL AV7005 (N) A332	N1B,	1	*
	40	403310043006M	TOP COVER BL SR7005 A332		1	
	41	nsp	MAGNET DOOR SR7005 A332		1	
	42	nsp	DAMPER DOOR SR7005 A332		1	
	43	nsp	BRACKET SCREW COVER SR7005 A332		1	

	Ref. No.	Part No.	Part Name	Remarks	Q'ty	New
	44	nsp	SHEET MEDIUM SR7005 A332		1	
	59	nsp	SHEET BUTTON SR7005 A332		2	
	74	472310015007M	SPRING KNOB		2	
	★ 45	606050104008S	13P FFC 80mm 1.25mm	U1B	1	
	★ 46	606050105001S	40P FFC 350mm 1.0mm		1	
	★ 47	606050106004S	23P FFC 610mm 1.0mm(105 Degree)		1	
	★ 48	nsp	5P PH-PH CORD		1	
	★ 49	nsp	3P PH-PH CONN CORD		1	
	★ 50	nsp	3P PH-PH CONN CORD		1	
	★ 51	nsp	PLATE EARTH SR7005 A332		1	
	★ 52	183010011001S	HD TUNER(KSM-H7101NNH-000)	U1B	1	
	★ 53	nsp	TERMINAL ASS		1	
	★ 56	nsp	BUFFER DOOR UD9004 37AK		2	
	★ 58	nsp	BUFFER		2	
	★ 60	nsp	BUFFER FOR VCO SHIELD		1	
	★ 61	nsp	SHEET		1	
	★ 62	nsp	RATING LABEL BASE		1	
	★ 63	nsp	CUPPER TAPE(W=15)	25mm	1	
	★ 64	nsp	WINDOWS 7 LABEL		1	
	★ 65	nsp	WIRE CLAMPER		10	
	★ 66	nsp	50X10 0.7T HIMERON		1	
	★ 67	nsp	ALUMINUM TAPE	20mm	1	
	★ 69	nsp	MASK TOP LID REAR		1	
	★ 70	nsp	MAC ADDRESS SUB ASSY			
	★ 71	nsp	CLEAR LABEL(44X12 T0.05)	U1B	1	
	★ 72	nsp	HOLDER FLD		1	
SCREWS						
	A	nsp	SCREW		3	
	B	nsp	SCREW	N1B	103	
	B	nsp	SCREW	U1B	102	
	C	nsp	B.T.SCREW EX600240		3	
	D	nsp	SCREW		3	
	E	nsp	SPECIAL SCREW		1	
	G	nsp	SCREW	U1B	11	
	G	nsp	SCREW	N1B	10	
	H	nsp	SCREW		59	
	J	nsp	SCREW		6	
	K	nsp	CUP TIGHT SCREW		2	
	L	nsp	SCREW		1	
	N	nsp	SCREW		6	

Personal notes:

PACKING VIEW

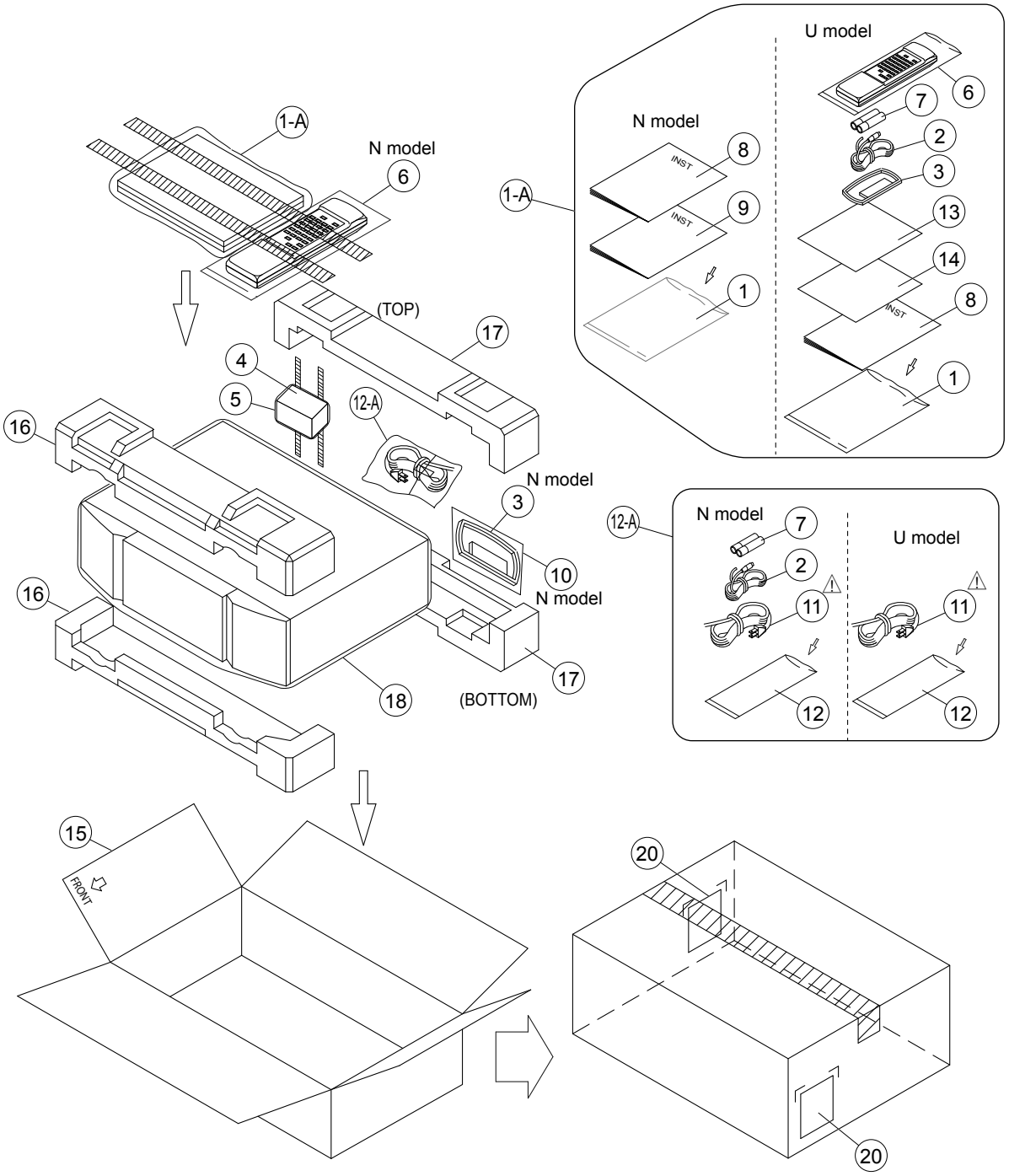

PARTS LIST OF PACKING & ACCESSORIES

* Parts for which "nsp" is indicated on this table cannot be supplied.
* Part indicated with the mark " ★ " is not illustrated in the exploded view.
* The parts listed below are for maintenance only, might differ from the parts used in the unit in appearances or dimensions.

Note: The symbols in the column "Remarks" indicate the following destinations.
U1B : North America model N1B : Europe model

	Ref. No.	Part No.	Part Name	Remarks	Q'ty	New
	1	nsp	ENVELOPE		1	
	2	00D3950029002	FM ANT ASS Y(F/ETRO)		1	
	3	116010001004S	AM LOOP ANTENNA(HD-10)	U1B	1	
	3	116010003000S	AM LOOP ANTENNA(S0160BL-25)	N1B	1	
	4	324810004004M	AUDYSSEY MIC ACM1H		1	
	5	nsp	POLY COVER		1	
	6	307010077005M	RC011SR REMOTE CONTROLLER		1	
	7	nsp	BATTERY(R03X2)		1	
	8	541110549026M	USER MANUAL AV7005 (U) A332	U1B	1	*
	8	541110549033M	USER MANUAL AV7005 (N) A332	N1B	1	*
	9	541110549095M	USER MANUAL AV7005 (N)2 A332	N1B	1	*
	10	nsp	ENVELOPE	N1B	1	
⚠	11	611050024005S	AC CORD SET(E3) V	U1B	1	
⚠	11	00MZC01803080	# 2P AC CORD 10A 250V CLASS2	N1B	1	
	12	nsp	POLY COVER		1	
	13	nsp	WARRANTY USA	U1B	1	
	14	nsp	WARRANTY CANADA	U1B	1	
	15	531210152004M	PACKING CASE AV7005 A332		1	*
	16	533610072001M	CUSHION F SR7005 A332		1	
	17	533610073004M	CUSHION R SR7005 A332		1	
	18	nsp	CABINET SHEET		1	
	20	nsp	CONT LABEL SUB ASSY AV7005 (U)	U1B	1	
	20	nsp	CONT LABEL SUB ASSY AV7005 (N)	N1B	1	
	★ 21	nsp	LABEL SIRIUS/HD RADIO SR7005 A332	U1B	1	
	★ 22	nsp	LABEL LAST FM SR7005 A332	N1B		

SEMICONDUCTORS

Only major semiconductors are shown, general semiconductors etc. are omitted to list.
The semiconductor which described a detailed drawing in a schematic diagram are omitted to list.

1. IC's

R5F64169DFD (HDMI : U5301)

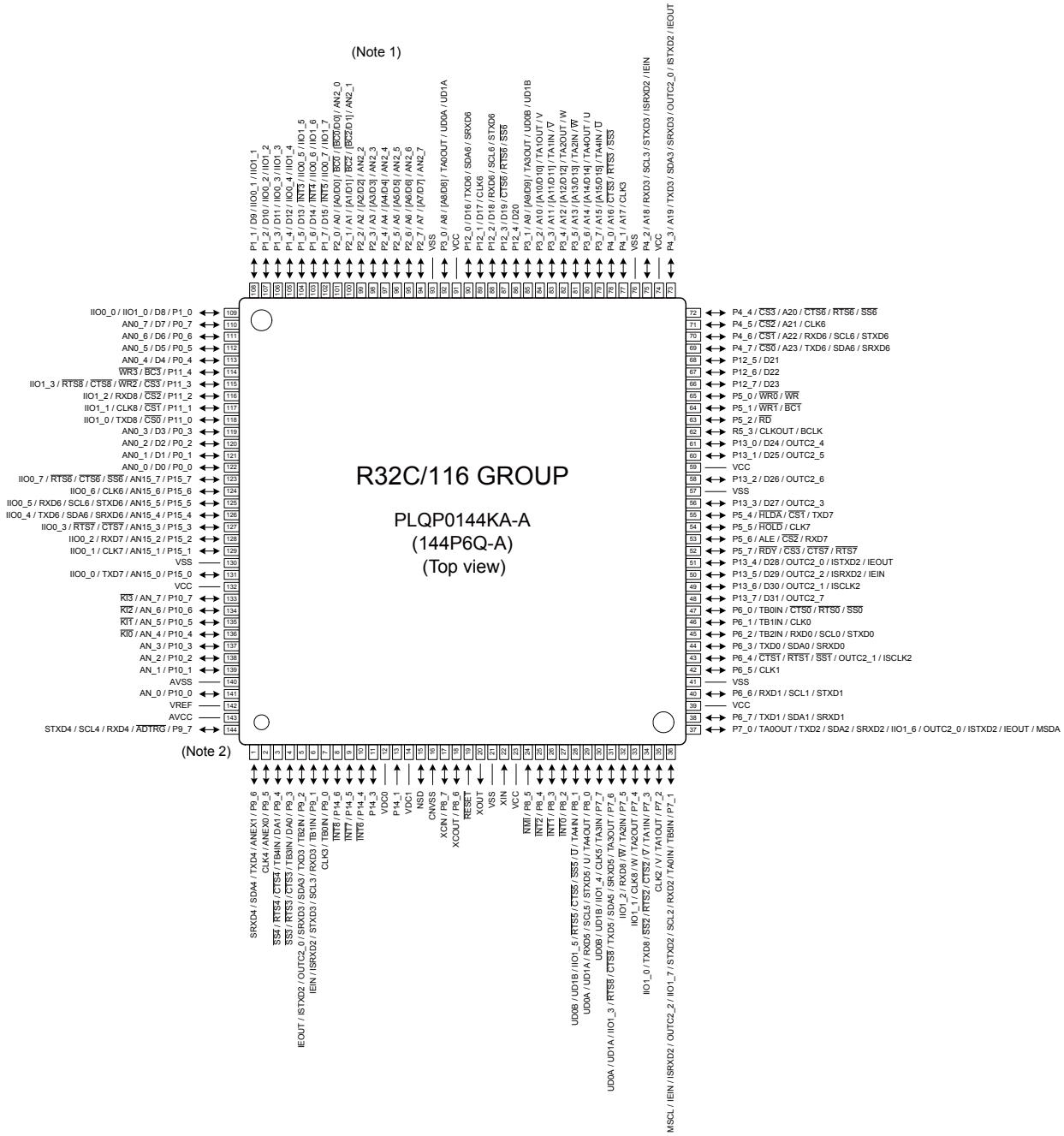

Notes:
1. Pin names in brackets [ ] represent a functional signal as a whole and should not be considered as two separate pins.
2. The position of pin number 1 varies by product. Refer to the index mark in attached “Package Dimensions”.

R5F64169DFD Terminal Functions

Pin	Pin Name	Synbol	I/O	Type	Pullup	Lv Cnv	STBY	stop	Function
1	P96/(TXD4)	SIRIUS RST	O	C	-	3/5	O/L	O/L	SIRIUS control pin
2	P95/(CLK4)	HD RADIO RST/ST	O/O/I	C/C/-	-	-	O/L	O/L	HD RADIO control pin /ANALOG TUNER control
3	P94/($\overline{CTS4}$)/TB4IN	RC-IN	I	C/-	M3VPu	-	O/L	O/L	Remote control signal input
4	P93/($\overline{CTS3}$)/TB3IN	Flasher IN	I	C/-	-	-	O/L	O/L	IR Flasher control signal input
5	P92/TXD3/SDA3	HDRADIO MOHI/TU SDA	O/I_O	C	-	-	O/L	O/L	HD RADIO control/ANALOG TUNER control
6	P91/RXD3/SCL3	HDRADIO MIHO/TU SCL	I/O	-/C	-	-	O/L	O/L	HD RADIO control/ANALOG TUNER control
7	P90/(CLK3)	E POWER	O	C	-	-	O/L	O/L	ETHERNET POWER control pin
8	P146/$\overline{INT8}$	$\overline{POWER\ KEY}$	I	-	3VPu	-	I	I	POWER KEY (WAIT MODE cancel, interrupt port)
9	P145/$\overline{INT7}$	REQ SOMI	I	-	-	-	I	O/L	MAIN-SUB u-com communication control output pin
10	P144/$\overline{INT6}$	RDS CLK(7005N model)	I	-	-	3/5	I	I	RDS control(7005N model)(Interrupt detection)
11	P143	CPU POWER	O	C	-	-	O/L	O/L	MAIN CPU POWER control pin (POWER ON: H) (ETHER=ON or CEC ON = STANDBY: H)
12	VDC0	VDC0	-	-	-	-	-	-	Smoothing capacitor connection pin
13	P141 IN ONLY	DOSD MIFO_BUSY	I	-	-	-	I	O/L	D.OSD CPU control pin
14	VDC1	VDC1	-	-	-	-	-	-	Smoothing capacitor connection pin
15	NSD	NSD	-	-	M3VPu	-	-	-	Emulator communication pin
16	CNVss	CNVSS	-	-	Pd	-	-	-	Single-chip / Micro-processor mode switching (Normal single-chip : L, Rewrite boot program start : H input set)
17	P87/(XCIN)	E RESET	O	C	-	-	O/L	O/L	ETHERNET RESET control pin
18	P86/(XCOUT)	232C POWER(REMOTE PWR)	O	C	-	-	O/L	O/L	232C POWER control pin(ON: H)/
19	RESET	RESET	-	-	M3VPu	-	-	-	Reset input (reset: L)
20	XOUT	X2	-	-	-	-	-	-	Clock output
21	VSS	VSS	-	-	-	-	-	-	GND
22	XIN	X1	-	-	-	-	-	-	Clock input
23	VCC	VCC1	-	-	-	-	-	-	+3V
24	P85/($\overline{NMI}$) IN ONLY	BT LINK	I	-	SW3	-	O/L	O/L	Detedion pin for M-XPort
25	P84/$\overline{INT2}$	PLDAERR	I	-		-	O/L	O/L	PLD ERROR detection
26	P83/$\overline{INT1}$	$\overline{B.DOWN}$	I	-	-	-	I	I	Power failure detect(Power failure:L)
27	P82/$\overline{INT0}$	WAKE UP	I	-	3VIn/Pd	-	I	I	WAKE up signal input
28	P81	D5V POWER	O	C	-	-	O/L	O/L	Digital 5V power control pin
29	P80/RXD5	KILL IR	O	-	-	-	O/L	O/L	Front IR disable control pin
30	P77/(CLK5)	EXP & FL DATA	O	C	-	-	O/L	O/L	EXP control pin & FL control pin
31	P76/TXD5	FL CE2	O	C	-	-	O/L	O/L	Main FL chip select pin
32	P75/RXD8	SIRIUS MI	I	-	(3Vin)	5/3	O/L	O/L	SIRIUS control pin
33	P74/(CLK8)/ TA2OUT	RC OUT	O	C	-	5/3	O/L	O/L	Remote generate pin
34	P73/TXD8	SIRIUS MO(7005N model)	O/I	C/N	-	3/5	O/L	O/L	SIRIUS control pin (7005N model) SIRIUS MO/RDS DATA SIRIUS control/ANALOG TUNER control
35	P72/CLK2	DOSD CPU CLK	O	C	-	-	O/L	O/L	D.OSD CPU control pin
36	P71/RXD2	DOSD CPU RX	I	-	-	-	O/L	O/L	D.OSD CPU control pin
37	P70/TXD2	DOSD CPU TX	O	C	-	-	O/L	O/L	D.OSD CPU control pin
38	P67/TXD1	TXD MO232I	O	C	-		O/L	O/L	Data transfer to external pin(AMX)/MITSUBISHI writer rewrite
39	VCC	VCC1	-	-	-	-	-	-	+3V
40	P66/RXD1	RXD MI232O	I	-	-	-	I	O/L	Data received from the external pin(AMX) /MITSUBISHI writer rewrite
41	VSS	VSS	-	-	-	-	-	-	GND
42	P65/(CLK1)/ SCLK(L)	EXP & FL CLK	O	C	Pd	-	O/L	O/L	EXP control pin & FL control pin
43	P64/(BUSY)	FL CE1	O	C	-	-	O/L	O/L	FL control order pin
44	P63/TXD0	E_TXDMOEI	O	C	-	-	O/L	O/L	ETHERNET communication control pin
45	P62/RXD0	E_RXDMIEO	I	-	-	-	I	O/L	ETHERNET communication control pin
46	P61/(CLK0)	FL RST	O	C	-	-	O/L	O/L	FL control pin
47	P60/($\overline{CTS0}$)	DOSD WRITE	O	C	-	-	O/L	O/L	D. OSD rewrite control pin
48	P137	ACK SIMO	O	C	-	-	O/L	O/L	MAIN-SUB u-com communication control output pin
49	P136/ISCLK2	CLK MO	O	C	-	-	O/L	O/L	MAIN-SUB u-com communication control output pin
50	P135/ISRXD2	SOMI	I	-	-	-	I	O/L	MAIN-SUB u-com communication control output pin
51	P134/ISTXD2	MOSI	O	C	-	-	O/L	O/L	MAIN-SUB u-com communication control output pin
52	P57/RDY	$\overline{RDY}$	I	C	M3VPu	-	I	I	External memory access pin(NC,Pup)
53	P56/ALE	ALE	O	C	-	-	O/L	O/L	External memory access pin(NC)
54	P55/$\overline{HOLD}$/$\overline{EPM}$	$\overline{HOLD}$/$\overline{FRASH\ EPM}$	I	C	M3VPu	-	I	I	External memory access pin(NC,Pup) /Rewrite boot program start : L input set
55	P54/$\overline{HLDA}$	$\overline{HLDA}$	O	C	-	-	O/L	O/L	External memory access pin(NC)
56	P133	ROM POWER	O	C	-	-	O/L	O/L	3.3V control pin for enhancing ROM
57	VSS	VSS	-	-	-	-	-	-	GND
58	P132	D.OSD MOFI_BUSY	O	C	-	-	O/L	O/L	D.OSD CPU control pin

Pin	Pin Name	Synbol	I/O	Type	Pullup	Lv Cnv	STBY	stop	Function
59	VCC	VCC2	-	-	-	-	-	-	+3V
60	P131	RST SUB	O	C	-	-	O/L	O/L	Output for reset of sub-µcom
61	P130	SCPU POWER	O	C	-	-	O/L	O/L	SUB CPU POWER ON/OFF switch(H:ON)
62	P53/BCLK	BCLK	O	C	-	-	O/L	O/L	External memory access pin(NC)
63	P52/$\overline{RD}$	$\overline{RD}$	O	C	-	-	O/L	O/L	External memory access pin(Connection:OE#)
64	P51/($\overline{WR1}$)/BC1	BC1	O	C	-	-	O/L	O/L	External memory access pin(NC)
65	P50/($\overline{WR0}$)/WR/CE	$\overline{WR}$/FRASH CE	O	C	Pd	-	O/L	O/L	External memory access pin(Connection:WE#) /Rewrite boot program start : H input set
66	P127	VSEL A	I	-	SW3VPu	-	I	I	Master Volume rotation detect input (Rotary encoder)
67	P126	VSEL B	I	-	SW3VPu	-	I	I	Master Volume rotation detect input (Rotary encoder)
68	P125	SUB UPDATE	O	C	-	-	O/L	O/L	SUB UPDATE mode control (DPMS/D&M WRITTER). Normal:L. SUB rewriting mode:H(SUB reset)
69	P47/$\overline{CS0}$/(A23)	$\overline{CS0}$	O	C	-	-	O/L	O/L	External memory access pin(Connection:CS#)
70	P46/($\overline{CS1}$)/A22	A22	O	C	-	-	O/L	O/L	External memory access pin(NC)
71	P45/($\overline{CS2}$)/A21	A21	O	C	-	-	O/L	O/L	External memory access pin(NC)
72	P44/($\overline{CS3}$)/A20	A20	O	C	-	-	O/L	O/L	External memory access pin(Connection:A19)
73	P43/A19	A19	O	C	-	-	O/L	O/L	External memory access pin(Connection:A18)
74	VCC	VCC	-	-	-	-	-	-	+3V
75	P42/A18	A18	O	C	-	-	O/L	O/L	External memory access pin(Connection:A17)
76	VSS	VSS	-	-	-	-	-	-	GND
77	P41/A17	A17	O	C	-	-	O/L	O/L	External memory access pin(Connection:A16)
78	P40/A16	A16	O	C	-	-	O/L	O/L	External memory access pin(Connection:A15)
79	P37/A15	A15	O	C	-	-	O/L	O/L	External memory access pin(Connection:A14)
80	P36/A14	A14	O	C	-	-	O/L	O/L	External memory access pin(Connection:A13)
81	P35/A13	A13	O	C	-	-	O/L	O/L	External memory access pin(Connection:A12)
82	P34/A12	A12	O	C	-	-	O/L	O/L	External memory access pin(Connection:A11)
83	P33/A11	A11	O	C	-	-	O/L	O/L	External memory access pin(Connection:A10)
84	P32/A10	A10	O	C	-	-	O/L	O/L	External memory access pin(Connection:A9)
85	P31/A9	A9	O	C	-	-	O/L	O/L	External memory access pin(Connection:A8)
86	P124	EXP STB	O	C	-	-	O/L	O/L	Expansion EXP control pin
87	P123	EXP OE	O	C	Pd	-	O/L	O/L	Expansion EXP control pin
88	P122/(RXD6)	EEPROM SCL/(I_O EXP)	I/O	C	-	-	O/L	I	EEPROM control pin/(Spare I / O EXP Control)
89	P121/(CLK6)	EEPROM SDA/(I_O EXP)	I/O	C	-	-	O/L	I	EEPROM control pin/(Spare I / O EXP Control)
90	P120/(TXD6)	D.OSD CPU RST	O	C	-	-	O/L	O/L	D.OSD CPU control pin
91	VCC	VCC	-	-	-	-	-	-	+3V
92	P30/A8	A8	O	C	-	-	O/L	O/L	External memory access pin(Connection:A7)
93	VSS	VSS	-	-	-	-	-	-	GND
94	P27/A7	A7	O	C	-	-	O/L	O/L	External memory access pin(Connection:A6)
95	P26/A6	A6	O	C	-	-	O/L	O/L	External memory access pin(Connection:A5)
96	P25/A5	A5	O	C	-	-	O/L	O/L	External memory access pin(Connection:A4)
97	P24/A4	A4	O	C	-	-	O/L	O/L	External memory access pin(Connection:A3)
98	P23/A3	A3	O	C	-	-	O/L	O/L	External memory access pin(Connection:A2)
99	P22/A2	A2	O	C	-	-	O/L	O/L	External memory access pin(Connection:A1)
100	P21/A1	A1	O	C	-	-	O/L	O/L	External memory access pin(Connection:A0)
101	P20/A0	A0	O	C	-	-	O/L	O/L	External memory access pin(NC)
102	P17/D15	D15	I/O	C	-	-	O/L	O/L	External memory access pin(Connection:D15)
103	P16/D14	D14	I/O	C	-	-	O/L	O/L	External memory access pin(Connection:D14)
104	P15/D13	D13	I/O	C	-	-	O/L	O/L	External memory access pin(Connection:D13)
105	P14/D12	D12	I/O	C	-	-	O/L	O/L	External memory access pin(Connection:D12)
106	P13/D11	D11	I/O	C	-	-	O/L	O/L	External memory access pin(Connection:D11)
107	P12/D10	D10	I/O	C	-	-	O/L	O/L	External memory access pin(Connection:D10)
108	P11/D9	D9	I/O	C	-	-	O/L	O/L	External memory access pin(Connection:D9)
109	P10/D8	D8	I/O	C	-	-	O/L	O/L	External memory access pin(Connection:D8)
110	P07/D7	D7	I/O	C	-	-	O/L	O/L	External memory access pin(Connection:D7)
111	P06/D6	D6	I/O	C	-	-	O/L	O/L	External memory access pin(Connection:D6)
112	P05/D5	D5	I/O	C	-	-	O/L	O/L	External memory access pin(Connection:D5)
113	P04/D4	D4	I/O	C	-	-	O/L	O/L	External memory access pin(Connection:D4)
114	P114	ISEL A	I	-	SW3VPu	-	I	I	Input Selector rotation detect input (Rotary encoder)
115	P113	ISEL B	I	-	SW3VPu	-	I	I	Input Selector rotation detect input (Rotary encoder)
116	P112/(RXD8)	ZVOL CLK	O	C	-	-	O/L	O/L	ZONE VOL(NJW1194) control
117	P111	VOL CLK	O	C	-	-	O/L	O/L	FUNCTION/VOLUME control(R2A15220)
118	P110/(TXD8)	VOL DATA	O	C	-	-	O/L	O/L	FUNCTION/VOLUME control(R2A15220)
119	P03/D3	D3	I/O	C	-	-	O/L	O/L	External memory access pin(Connection:D3)
120	P02/D2	D2	I/O	C	-	-	O/L	O/L	External memory access pin(Connection:D2)
121	P01/D1	D1	I/O	C	-	-	O/L	O/L	External memory access pin(Connection:D1)
122	P00/D0	D0	I/O	C	-	-	O/L	O/L	External memory access pin(Connection:D0)

Pin	Pin Name	Synbol	I/O	Type	Pullup	Lv Cnv	STBY	stop	Function
123	P157	ZVOL DATA	O	C	-	-	O/L	O/L	ZONE VOL(NJW1194) control
124	P156	E SPI REQ	I	-	Pd	-	O/L	O/L	ETHERNET communication control pin
125	P155/(RXD6)	232C CONTROL (SUB LOG MODE)	O	C	-	-	O/L	O/L	SUB LOG MODE : For 232C course switch control
126	P154/(TXD6)	TUNED	I	-	SW3VPu	-	O/L	O/L	ANALOG TUNER control (Except 7005U model)
127	P153	E SPI CS	O	C	-	-	O/L	O/L	ETHERNET communication control pin
128	P152/(RXD7)	E SPI MIEO	I	-	Pd	-	O/L	O/L	ETHERNET communication control pin
129	P151/(CLK7)	E SPI CLK	O	C	Pd	-	O/L	O/L	ETHERNET communication control pin
130	VSS	VSS	-	-	-	-	-	-	GND
131	P150/(TXD7)	E SPI MOEI	O	C	Pd	-	O/L	O/L	ETHERNET communication control pin
132	VCC	VCC	-	-	-	-	-	-	+3V
133	P107/(AN7)/($\overline{KI3}$)	ZVOL STB	O	C	-	-	O/L	O/L	ZONE VOL(NJW1194) control
134	P106/AN6/$\overline{KI2}$	KEY3	I	-	M3VPu	-	I	I	Button input 3
135	P105/AN5/$\overline{KI1}$	KEY2	I	-	M3VPu	-	I	I	Button input 2
136	P104/AN4/$\overline{KI0}$	KEY1	I	-	M3VPu	-	I	I	Button input 1
137	P103/AN3	DOOR DET	I	-	SW3VPu	-	O/L	O/L	Door detect input
138	P102/AN2	MIC/H_P/LIMIT/TH_A	I	-	SW3VPu	-	O/L	O/L	MIC detection/Headphone detection/LIMIT decision detection/ Temperature detection B input (A/D detection)
139	P101/AN1	REDLED	O	C	-	-	O/L	O/L	POWER/STANDBY LED control pin(ON : H)
140	AVSS	AVSS	-	-	-	-	-	-	ANALOG GND
141	P100/AN0	MODE	I	-	M3VPu	-	I	I	Destination switch input
142	VREF	VREF	-	-	-	-	-	-	Standard power input +3V
143	AVCC	AVCC	-	-	-	-	-	-	Analog power +3V
144	P97/(RXD4)	MAIN POWER	O	C	-	-	O/L	O/L	MAIN POWER control pin

R5F3650KNFB (HDMI : U5500)

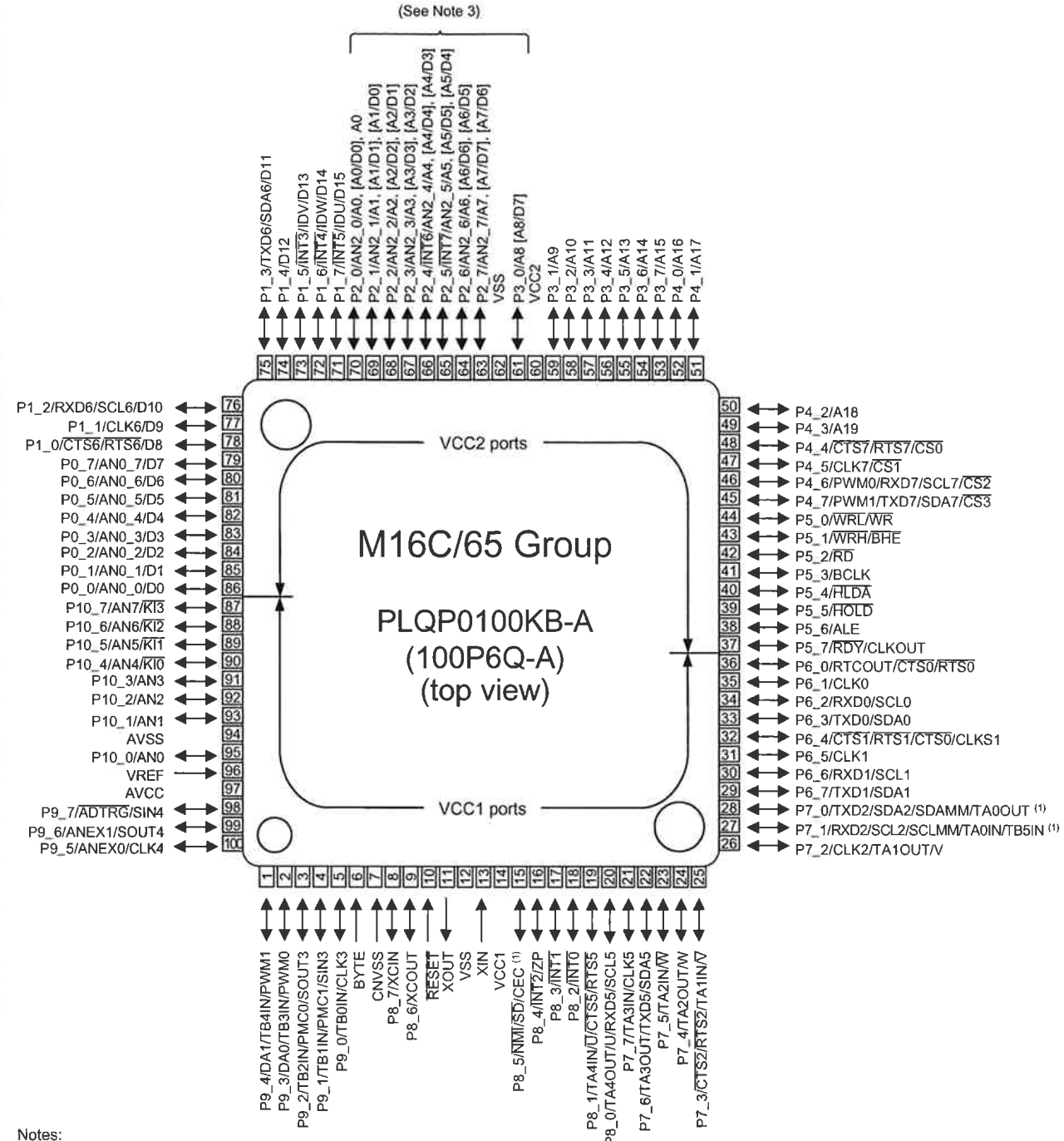

Notes:
1. N-channel open drain output.
2. Check the position of Pin 1 by referring to appendix 1, Package Dimensions.
3. Pin names in brackets [ ] represent a single functional signal. They should not be considered as two separate functional signals.

R5F3650KNFB Terminal Functions

Pin	Pin Name	Synbol	I/O	Type	Det	Op (Int.)	Pu/Pd (Ext.)	Res	PURE D	CEC STBY	P.OFF	Function
1	P94	VSEL DATA	O	C	-	-	-	Z	-	O/L	Z	VIDEO PLD control pin
2	P93	DIR CE	O	C	-	-	-	Z	-	O/L	Z	DIR control pin (LC89058W-VF4A)
3	P92/SOUT3	DIR DIN	O	C	-	-	-	Z	-	O/L	Z	DIR control pin (LC89058W-VF4A)
4	P91/SIN3	DIR DOUT	I	-	Lv	-	DA3.3Pu	Z	-	-	Z	DIR control pin (LC89058W-VF4A)
5	P90/CLK3	DIR CLK	O	C	-	-	-	Z	-	O/L	Z	DIR control pin (LC89058W-VF4A)
6	BYTE	BYTE	-	-	-	-	-	-	-	-	-	GND(Ext. data bus bit width switching, 16bit : L)
7	CNVCS	CNVSS	-	-	-	-	Pd	-	-	-	-	Single-chip/Micro-processor mode switching (Normal single-chip : L, Rewrite boot program start : H input set)
8	P87	ADC RST	O	C	-	-	-	Z	-	O/L	Z	AD(******) control pin
9	P86	DIR CE4	O	C	-	-	-	Z	-	O/L	Z	DIR control pin (LC89058W-VF4A)
10	RESET	$\overline{\text{SUBRESET}}$	I	-	Lv	-	SCPU3VPu	L	-	-	Z	Reset input
11	XOUT	X1	O	-	-	-	-	-	-	-	-	Oscillator connection
12	VSS	VSS	-	-	-	-	-	-	-	-	-	GND
13	XIN	X2	I	-	-	-	-	-	-	-	-	Oscillator connection
14	VCC	VCC	-	-	-		-	-	-	-	-	+3.3V
15	P85(N)/(NMI)/ (CEC)	(CEC_IN)	I	-	-	-	Pd	-	-	-	-	NC ("H" fixed / Reserve (16pin CEC-D signal input for TEST))
16	P84/INT2	CEC_IN	I	-	E↓&L	-	SCPU3VPu	Z	-	-	Z	CEC-D signal input pin
17	P83/INT1	ACK SIMO	I	-	E↓&L	-	-	Z	-	-	Z	MAIN-SUB ucom communication control input pin (MAIN ucom Hack from the main "L" Return)
18	P82/INT0	$\overline{\text{SUB BDOWN}}$	I	-	E↓&L		-	Z	-	-	Z	Power failure detect(Power failure:L)
19	P81	ABT RST	O	C	-	-	-	Z	-	O/H	Z	IP CONV(ABT2015) Reset
20	P80/(RXD5)	NC	I	-	-	-	Pd	Z	-	-	Z	NC
21	P77/(CLK5)	SUB TDO	I	-	-	-	-	Z	-	O/L	Z	PLD rewriting control (JTAG)
22	P76/(TXD5)	A PLD CS /"D/M"	O	C	-	-	-	Z	-	-	O/L	A PLD control pin/ D&M WRITTER / MITSUBISHI rewritten for determining (DW :L)
23	P75	A PLD DATA	O	C	-	-	-	Z	-	O/L	Z	A PLD control pin
24	P74	A PLD CLK	O	C	-	-	-	Z	-	O/L	Z	A PLD control pin
25	P73/CTS2	NC	I	-	-	-	Pd	Z	-	-	Z	NC
26	P72/CLK2	DA POWER	O	C	-	-	-	Z	O/H	-	Z	DIGITAL power (DA3.3V,DA1.2V) ON/OFF control (H: ON)
27	P71(N)/RXD2/ SCLMM	HSCL(400k)	I/O	N	-	-	CEC3VPu	Z	-	O/L	O/L	VIDEO I²C- IP CONV(ABT2015)/HDMI_R(ADV7840)/ HDMI T(ADV7511)/SWITCHER(ADV3002)
28	P70(N)/TXD2/ SDAMM	HSDA(400k)	I/O	N	-	-	CEC3VPu	Z	-	O/L	O/L	VIDEO I²C- IP CONV(ABT1030)/HDMI_R(ADV7840)/ HDMI T(ADV7511)/SWITCHER(ADV3002)
29	P67/TXD1	TXD	O	C	-	-	SCPU3VPu	Z	-	-	Z	Data transmission output to external
30	P66/RXD1	RXD	I	-	Lv	-	SCPU3VPu	Z	-	-	Z	Data reception input from the external
31	P65/CLK1/SCLK	SCLK	I	-	-	-	Pd	Z	-	-	Z	Emulator communication pin
32	P64/CTS1	HIN SELA	O	C	-	-	-	Z	-	O/L	Z	For HDMI 4/5/6/F selection(TC4052)
33	P63/TXD0	SOMI	O	C	-	-	-	Z	-	-	Z	MAIN-SUB ucom communication control pin
34	P62/RXD0	SIMO	I	-	-	-	-	Z	-	-	Z	MAIN-SUB ucom communication control pin
35	P61/CLK0	CLK SIMO	I	-	-	-	-	Z	-	-	Z	MAIN-SUB ucom communication control pin
36	P60/CTS0	REQ SOMI	O	C	-	-	-	Z	-	-	Z	MAIN-SUB ucom communication control pin
37	P57	1TMDS SW RST	O	C	-	-	SCPU3VPu	Z	-	-	Z	HDMI SWITCHER ADV3002 Reset pin
38	P56	DV POWER2	O	C	-	-	-	Z	O/H	-	Z	DIGITAL.VIDEO power control pin (DV1.8V)
39	P55/EPM	EPM	I	-	-	-	Pd	Z	-	-	Z	Rewrite boot program start : L input set
40	P54	CEC_OUT	O	C	-	-	-	Z	-	-	Z	CEC-D signal input pin
41	P53	DV POWER3	O	C		-	-	Z	O/H	O/L	Z	DIGITAL.VIDEO power control pin (DV1.0V)
42	P52	Z2SSIG.DET	I	-	Lv	-	SCPU3VPu	Z	-	I	Z	ZONE2 S signal presence detection input (Connected: H)
43	P51	HIN SELB	O	C	-	-	-	Z	-	O/L	Z	For HDMI 4/5/6/F selection(TC4052)
44	P50/CE	MONI SEL/CE/ DSP BOOT	O/I	C	-	-	SCPU3VPu	Z	-	-	Z	MONI SEL(for Dual Moni)(MAX4886) /Rewrite boot program start : H input set
45	P47/(TXD7)/SDA7	VSDA	I/O	C	-	-	DV3VPu	Z	-	-	O/L	ENCODER ADV7392 I2C/VIDEO SELECT IC(NJW1327)
46	P46/(RXD7)/SCL7	VSCL	I/O	C	-	-	DV3VPu	Z	-	-	O/L	ENCODER ADV7392 I2C/VIDEO SELECT IC(NJW1327)
47	P45/(CLK7)	NC	I	-	-	-	Pd	Z	-	I	Z	NC
48	P44	HPD1	O	C	-	-	-	Z	-	O/L	Z	HP DET control pin
49	P43	HDMI A.SEL	O	C	-	-	-	Z	-	O/L	Z	HDMI AUDIO switch (H : DSP course, L : HDMI Rx→Tx through)(TC74VHC244)
50	P42	NC	I	-	-	-	Pd	Z	-	I	Z	NC
51	P41	CEC POWER	O	C	-	-	-	Z	O/H	O/H	Z	Power ON (CEC5V,CEC3.3V,CEC1.8V) for CEC STANDBY
52	P40	HPD2	O	C	-	-	-	Z	-	O/L	Z	HP DET control pin
53	P37	HDMIR_RST	O	C	-	-	SCPU3VPu	Z	-	-	Z	Reset for HDMI RECEIVER(ADV7840)
54	P36	1TX RST	O	C	-	-	SCPU3VPu	Z	-	-	Z	Reset for HDMI TRANSMITTER (ADV7511)
55	P35	ENC RST	O	C	-	-	SCPU3VPu	Z	-	O/L	Z	Reset for VIDEO ENCODER (ADV7392)
56	P34	Z1 SSIGDET	I	-	Lv	-	SCPU3VPu	Z	-	-	Z	S signal presence detection input (Connected: H)
57	P33	HPD3	O	C	-	-	-	Z	-	O/L	Z	HP DET control pin

Pin	Pin Name	Synbol	I/O	Type	Det	Op (Int.)	Pu/Pd (Ext.)	Res	PURE D	CEC STBY	P.OFF	Function
58	P32	DAC MDI	O	C	-	-	-	Z	-	O/L	Z	DAC control pin (ASK4358)
59	P31	DAC MC	O	C	-	-	-	Z	-	O/L	Z	DAC control pin (ASK4358)
60	VCC	VCC	-	-	-	-	-	-	-	-	-	+3.3V
61	P30	DAC MS	O	C	-	-	-	Z	-	O/L	Z	DAC control pin (ASK4358)
62	VSS	VSS	-	-	-	-	-	-	-	-	-	GND
63	P27	DAC RST	O	C	-	-	-	Z	-	O/L	Z	DAC control pin (ASK4358)
64	P26	DV POWER	O	C	-	-	-	Z	O/H	MODE1=O/H MODE2=O/L	Z	DIGITAL VIDEO power control pin (DV5V,DV3.3V)
65	P25/INT7	OSD CPU BUSY SIFO	I	-	Lv	-	Pd	Z	-	-	Z	OSD CPU control pin
66	P24/INT6	1TX INT	I	-	Lv	-		Z	-	-	Z	HDMI OUT1 signal presence detection input (HDMI TRANS1 ADV7511)
67	P23	SUB TMS	O	C	-	-	DA3.3Pu	Z	-	-	Z	PLD rewriting control (JTAG)
68	P22	VEXP STB	O	C	-	-	-	Z	-	O/L	Z	Terminal output for VIDEO expander pin (BU4094BCFV)
69	P21	VEXP OE	O	C	-	-	-	Z	-	O/L	Z	Terminal output for VIDEO expander pin (BU4094BCFV)
70	P20	VEXP CLK	O	C	-	-	-	Z	-	O/L	Z	CLK output for VIDEO expander control(BU4094BCFV)
71	P17/INT5	ADVINT1	I	-	E↓&L	-	-	Z	-	-	Z	HDMI RECEIVER(ADV7840)INT1 output
72	P16/INT4	ADVINT2	I	-	E↓&L	-	-	Z	-	-	Z	HDMI RECEIVER(ADV7840)INT2 output
73	P15/INT3	ADVINT3	I	-	E↓&L	-	-	Z	-	-	Z	HDMI RECEIVER(ADV7840)INT3 output
74	P14	HPD4	O	C	-	-	-	Z	-	O/L	Z	HP DET control pin
75	P13/TXD6	DSP MOSI	O	C	-	-	DA3VPu	Z	-	O/L	Z	DSP control pin(ADSP-21367-333)
76	P12/RXD6	DSP MISO	I	-	Lv	-	DA3VPu	Z	-	-	Z	DSP control pin(ADSP-21367-333)
77	P11/CLK6	DSPICLK	O	C	-	-	DA3VPu	Z	-	O/L	Z	DSP control pin(ADSP-21367-333)
78	P10	Z1VSIG.DET	I	-	Lv	-	SCPU3VPu	Z	-	-	Z	VIDEO IN signal presence detection input(Signal input:H)
79	P07	SUB TDI	O	C	-	-	DA3.3Pu	Z	-	O/L	Z	PLD rewriting control (JTAG)
80	P06	VSEL CS	O	C	-	-	-	Z	-	MODE1=O/H MODE2=O/L	Z	VIDEO PLD control pin
81	P05	NC	I	-	-	-	Pd	Z	-	-	Z	NC
82	P04	NC	I	-	-	-	Pd	Z	-	-	Z	NC
83	P03	SUB TCK	O	C	-	-	Pd	Z	-	-	Z	PLD rewriting control (JTAG)
84	P02	DIR RST3	O	C	-	-	-	Z	-	O/L	O/L	DIR control pin (LC89058W-VF4A)
85	P01	DIR RST2	O	C	-	-	-	Z	-	O/L	O/L	DIR control pin (LC89058W-VF4A)
86	P00	DIR RST1	O	C	-	-	-	Z	-	O/L	O/L	DIR control pin (LC89058W-VF4A)
87	P107/(AN7)	DSP RST	O	C	-	-	-	Z	-	O/L	Z	DSP(ADSP-21367-333) reset output pin(Reset : L)
88	P106/(AN6)	HPD5	O	C	-	-	-	Z	-	O/L	Z	HP DET control pin
89	P105/(AN5)	DSP ROMRST	O	C	-	-	-	Z	-	O/L	Z	Memory reset for DSP (Reset : L)
90	P104/(AN4)	COMPS DET	I	-	Lv	-	SCPU3VPu	Z	-	-	Z	COMPONENT IN signal presence detection input
91	P103/(AN3)	DSP FLAG0	I	-	Lv	-	Pd	Z	-	-	Z	DSP control pin(ADSP-21367-333)
92	P102/(AN2)	DSPICS	O	C	-	-	DA3VPu	Z	-	O/L	Z	DSP control pin(ADSP-21367-333)
93	P101/(AN1)	HPD6	O	C	-	-	-	Z	-	O/L	Z	HP DET control pin
94	AVSS	AVSS	-	-	-	-	-	-	-	-	-	AD GND
95	P100/(AN0)	VSEL CLK	O	C	-	-	-	Z	-	O/L	Z	VIDEO PLD control pin
96	VREF	VREF	-	-	-	-	-	-	-	-	-	AD standard +3.3V
97	AVCC	AVCC	-	-	-	-	-	-	-	-	-	AD +3.3V
98	P97/(SIN4)	Tx EN	O	C	-	-	-	Z	-	-	Z	AD8195 ENABLE pin for Front HDMI control
99	P96/(SOUT4)	OSD CPU BUSY SOFI	O	C	-	-	Pd	Z	-	-	Z	OSD CPU control pin
100	P95/(CLK4)	VEXP DIN	O	C	-	-	-	Z	-	O/L	Z	DATA output for VIDEO expander control (BU4094BCFV)

ADV3002BSTZ (HDMI : U1002)

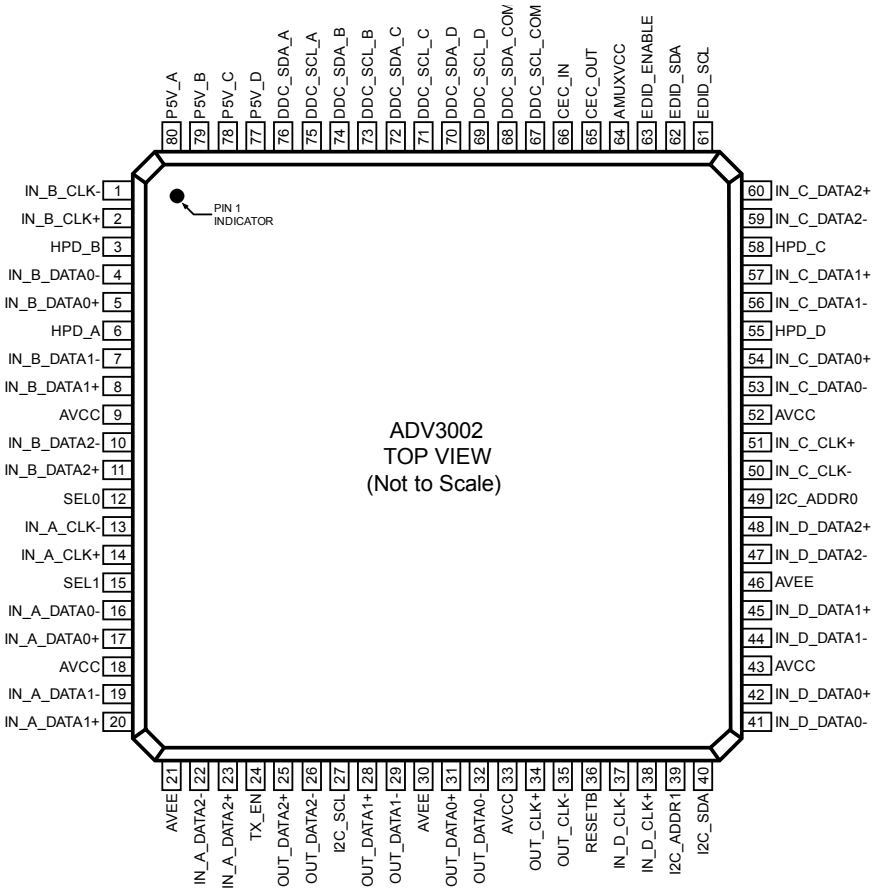

ADV3002BSTZ Block diagram

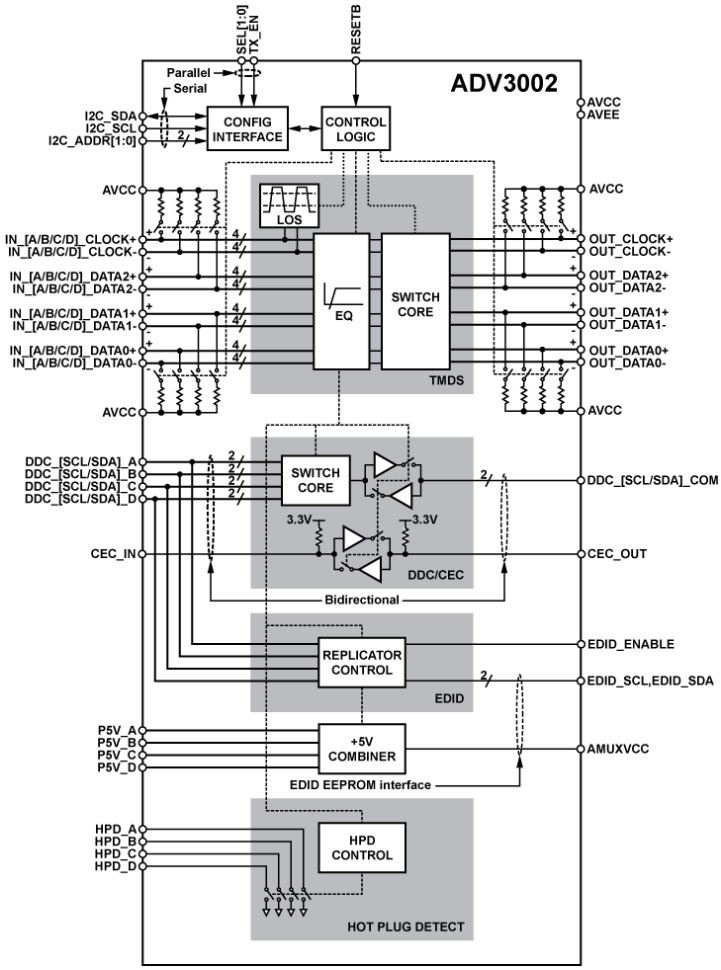

AD8195ACPZ (HDMI : U1)

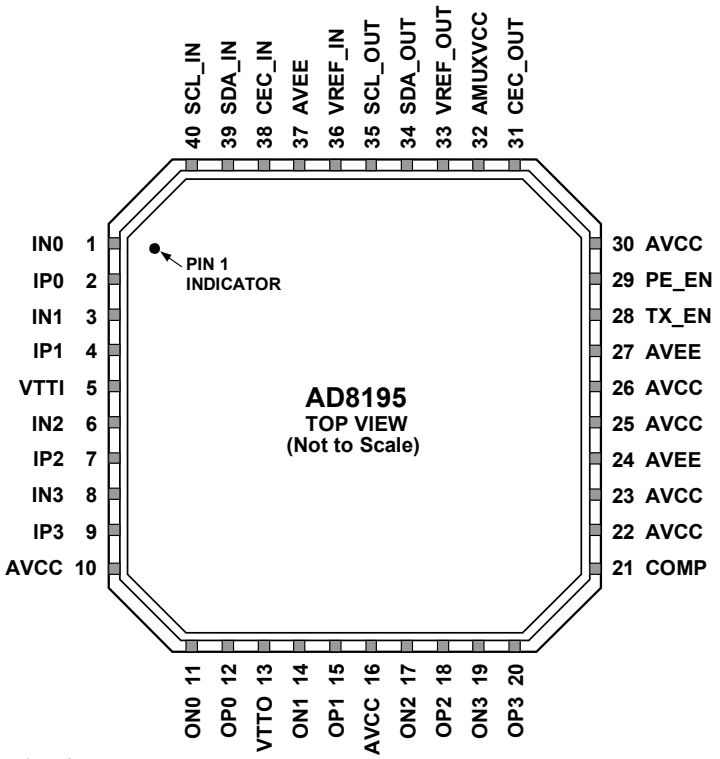

NOTES
1. THE AD8195 LFCSP HAS AN EXPOSED PAD ON THE UNDERSIDE OF THE PACKAGE THAT AIDS IN HEAT DISSIPATION. THE PAD MUST BE ELECTRICALLY CONNECTED TO THE AVEE SUPPLY PLANE IN ORDER TO MEET THERMAL SPECIFICATIONS.

07049-003

AD8195ACPZ Terminl Function

Pin No.	Mnemonic	Type[1]	Description
1	IN0	HS I	High Speed Input Complement.
2	IP0	HS I	High Speed Input.
3	IN1	HS I	High Speed Input Complement.
4	IP1	HS I	High Speed Input.
5	VTTI	Power	Input Termination Supply. Nominally connected to AVCC.
6	IN2	HS I	High Speed Input Complement.
7	IP2	HS I	High Speed Input.
8	IN3	HS I	High Speed Input Complement.
9	IP3	HS I	High Speed Input.
10, 16, 22, 23, 25, 26, 30	AVCC	Power	Positive Analog Supply. 3.3 V nominal.
11	ON0	HS O	High Speed Output Complement.
12	OP0	HS O	High Speed Output.
13	VTTO	Power	Output Termination Supply. Nominally connected to AVCC.
14	ON1	HS O	High Speed Output Complement.
15	OP1	HS O	High Speed Output.
17	ON2	HS O	High Speed Output Complement.
18	OP2	HS O	High Speed Output.
19	ON3	HS O	High Speed Output Complement.
20	OP3	HS O	High Speed Output.
21	COMP	Control	Power-On Compensation Pin. Bypass to ground through a 10 µF capacitor.
24, 27, 37, Exposed Pad	AVEE	Power	Negative Analog Supply. 0 V nominal.
28	TX_EN	Control	High Speed Output Enable Parallel Interface.
29	PE_EN	Control	High Speed Preemphasis Enable Parallel Interface.
31	CEC_OUT	LS I/O	CEC Output Side.
32	AMUXVCC	Power	Positive Auxiliary Buffer Supply. 5 V nominal.

AD8195ACPZ Block diagram

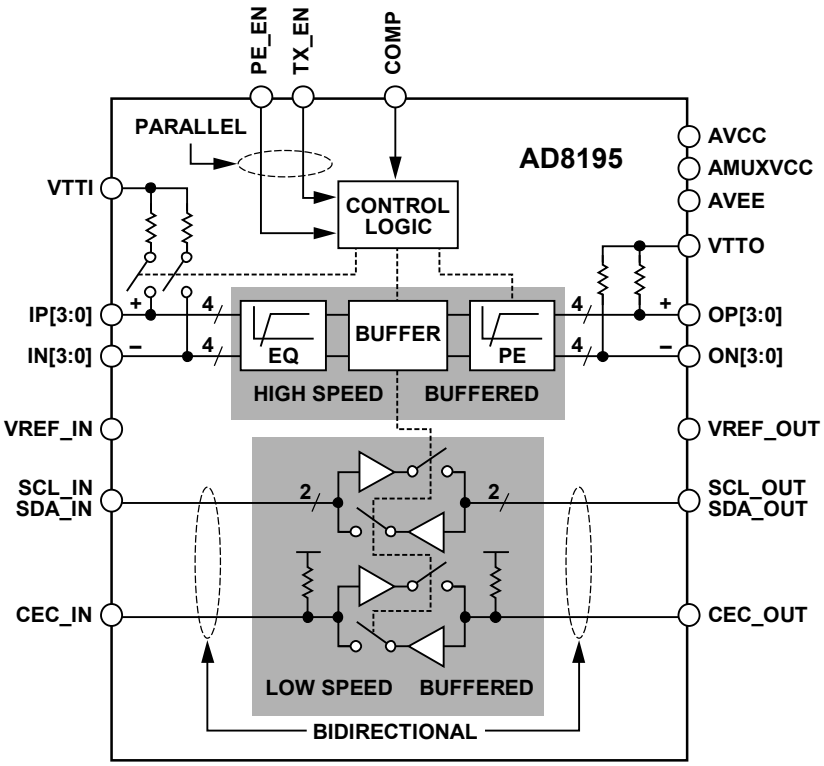

ADV7511BSTZ (HDMI : U1801)

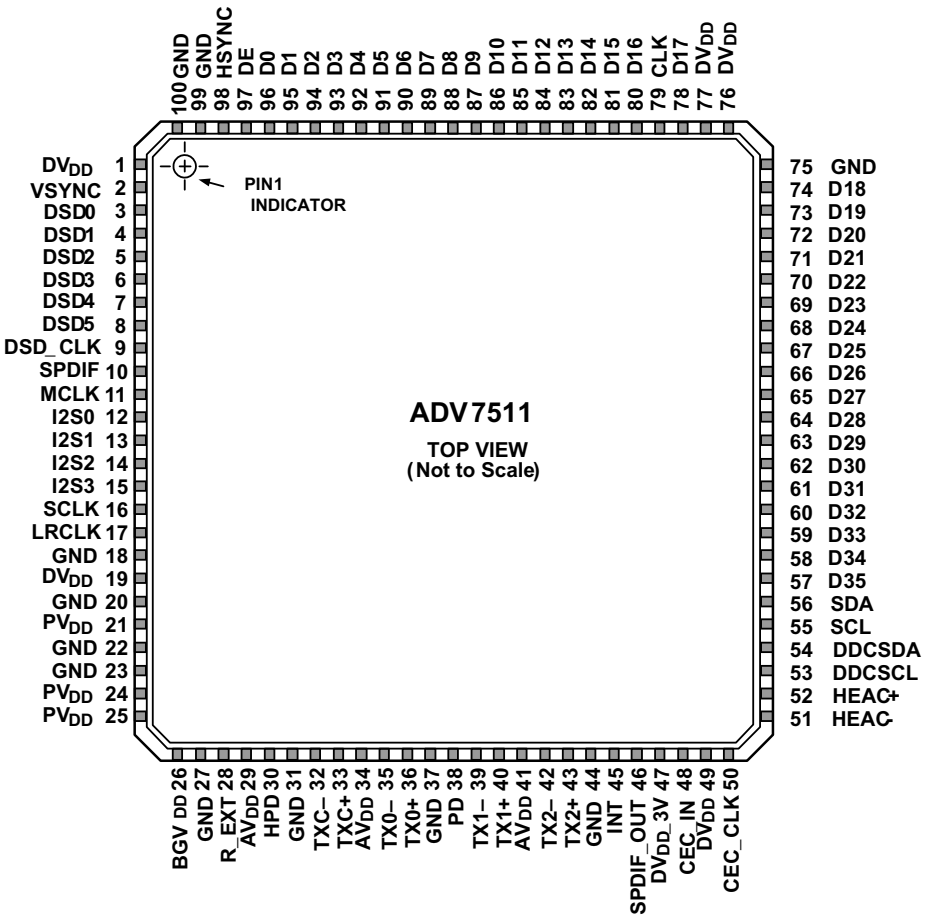

ADV7511BSTZ Block diagram

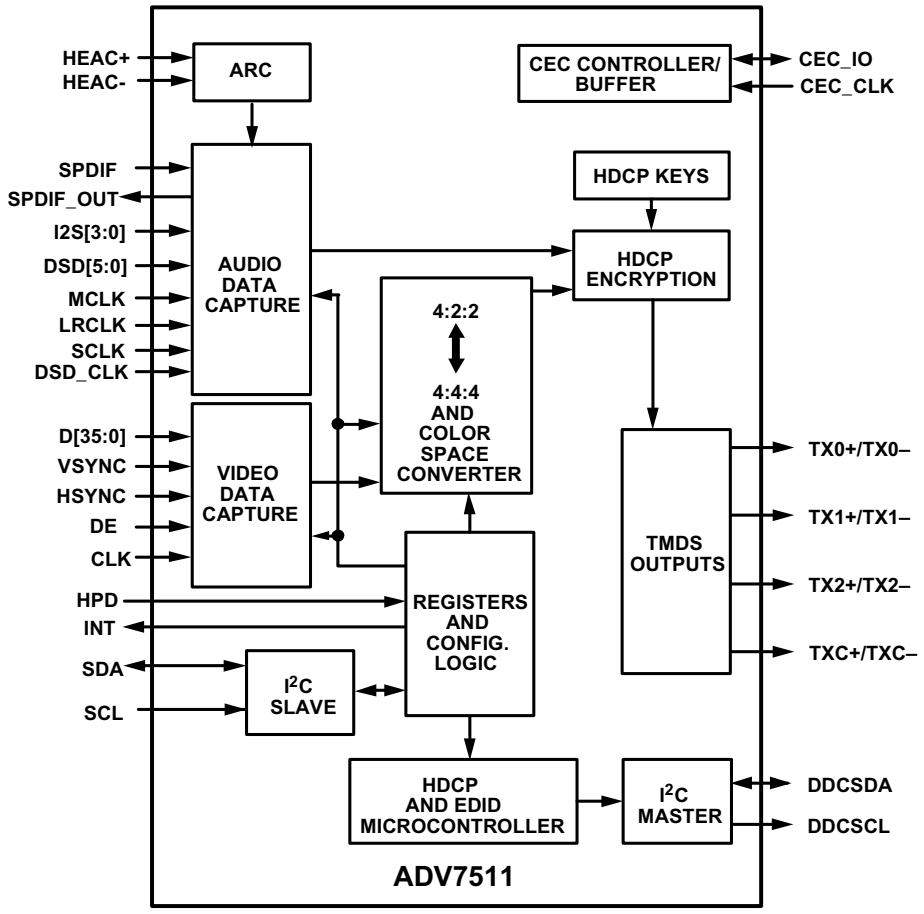

IS42S32200E6TL (HDMI : U1602)

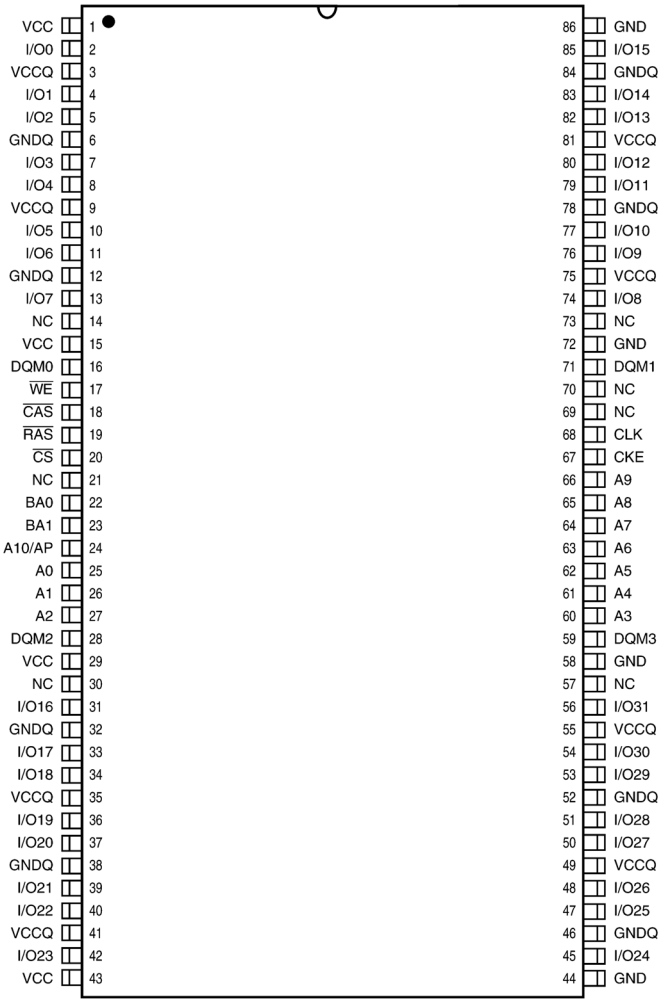

IS42S32200E6TL Block diagram

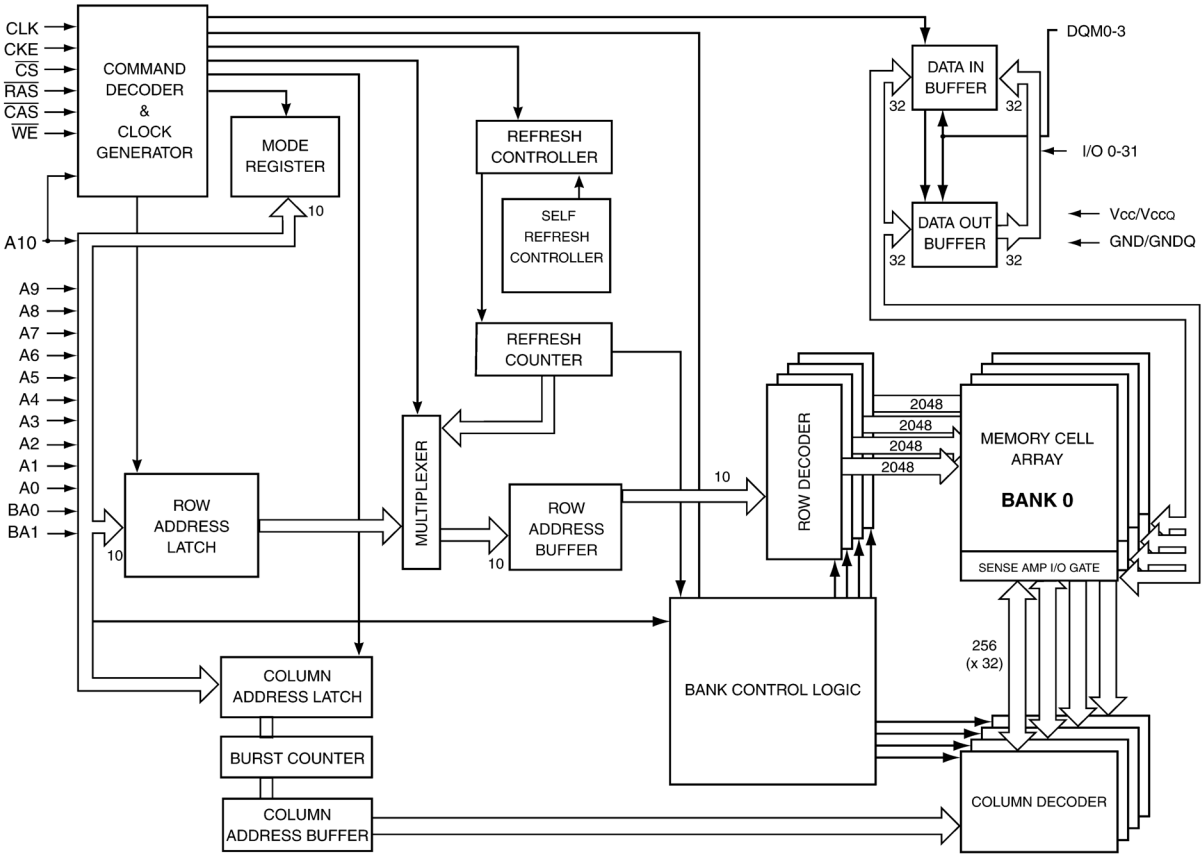

IS42S32200E6TL Terminl Function

Pin No.	Signal	Pin No.	Signal	Pin No.	Signal	Pin No.	Signal
1	VDD	53	VDD	105	VDD	157	VDD
2	DATA28	54	GND	106	GND	158	VDD
3	DATA27	55	IOVDD	107	IOVDD	159	GND
4	GND	56	ADDR0	108	$\overline{\text{SDCAS}}$	160	VDD
5	IOVDD	57	ADDR2	109	$\overline{\text{SDRAS}}$	161	VDD
6	DATA26	58	ADDR1	110	SDCKE	162	VDD
7	DATA25	59	ADDR4	111	$\overline{\text{SDWE}}$	163	TDI
8	DATA24	60	ADDR3	112	$\overline{\text{WR}}$	164	$\overline{\text{TRST}}$
9	DATA23	61	ADDR5	113	SDA10	165	TCK
10	GND	62	GND	114	GND	166	GND
11	VDD	63	VDD	115	IOVDD	167	VDD
12	DATA22	64	GND	116	SDCLK0	168	TMS
13	DATA21	65	IOVDD	117	GND	169	CLK_CFG0
14	DATA20	66	ADDR6	118	VDD	170	BOOTCFG0
15	IOVDD	67	ADDR7	119	$\overline{\text{RD}}$	171	CLK_CFG1
16	GND	68	ADDR8	120	ACK	172	$\overline{\text{EMU}}$
17	DATA19	69	ADDR9	121	FLAG3	173	BOOTCFG1
18	DATA18	70	ADDR10	122	FLAG2	174	TDO
19	VDD	71	GND	123	FLAG1	175	DAI4
20	GND	72	VDD	124	FLAG0	176	DAI2
21	DATA17	73	GND	125	DAI20	177	DAI3
22	VDD	74	IOVDD	126	GND	178	DAI1
23	GND	75	ADDR11	127	VDD	179	IOVDD
24	VDD	76	ADDR12	128	GND	180	GND
25	GND	77	ADDR13	129	IOVDD	181	VDD
26	DATA16	78	GND	130	DAI19	182	GND
27	DATA15	79	VDD	131	DAI18	183	DPI14
28	DATA14	80	AVSS	132	DAI17	184	DPI13
29	DATA13	81	AVDD	133	DAI16	185	DPI12
30	DATA12	82	GND	134	DAI15	186	DPI11
31	IOVDD	83	CLKIN	135	DAI14	187	DPI10
32	GND	84	XTAL2	136	DAI13	188	DPI9
33	VDD	85	IOVDD	137	DAI12	189	DPI8
34	GND	86	GND	138	VDD	190	DPI7
35	DATA11	87	VDD	139	IOVDD	191	IOVDD
36	DATA10	88	ADDR14	140	GND	192	GND
37	DATA9	89	GND	141	VDD	193	VDD
38	DATA8	90	IOVDD	142	GND	194	GND
39	DATA7	91	ADDR15	143	DAI11	195	DPI6
40	DATA6	92	ADDR16	144	DAI10	196	DPI5
41	IOVDD	93	ADDR17	145	DAI8	197	DPI4
42	GND	94	ADDR18	146	DAI9	198	DPI3
43	VDD	95	GND	147	DAI6	199	DPI1
44	DATA4	96	IOVDD	148	DAI7	200	DPI2
45	DATA5	97	ADDR19	149	DAI5	201	CLKOUT
46	DATA2	98	ADDR20	150	IOVDD	202	$\overline{\text{RESET}}$
47	DATA3	99	ADDR21	151	GND	203	IOVDD
48	DATA0	100	ADDR23	152	VDD	204	GND
49	DATA1	101	ADDR22	153	GND	205	DATA30
50	IOVDD	102	$\overline{\text{MS1}}$	154	VDD	206	DATA31
51	GND	103	$\overline{\text{MS0}}$	155	GND	207	DATA29
52	VDD	104	VDD	156	VDD	208	VDD

LC89058W-E (HDMI : U2805,U2806,U2807)

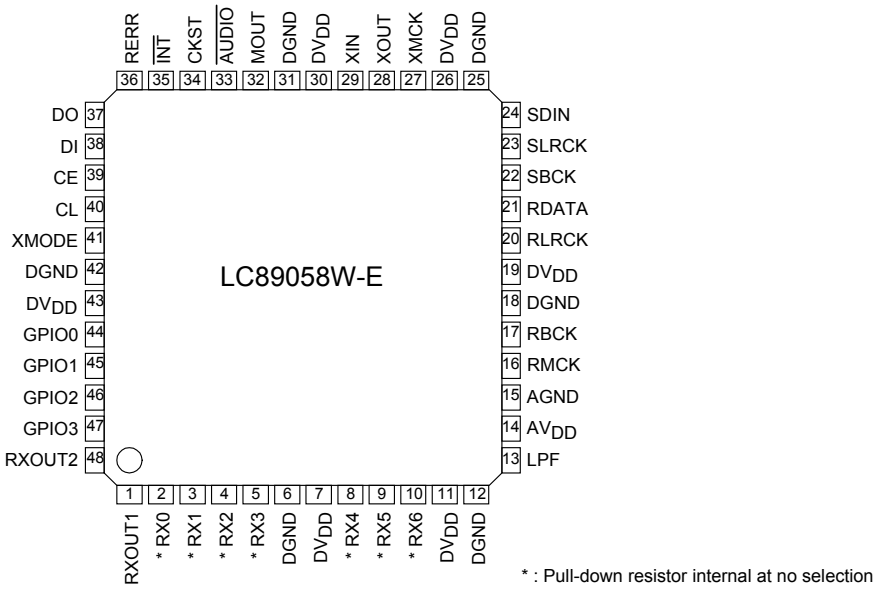

* : Pull-down resistor internal at no selection

Pin Functions

Pin No.	Name	I/O	Function
1	RXOUT1	O	RX0-6 input S/PDIF through output pin 1
2	RX0	I_5(pd)	5V withstand voltage TTL input level compatible S/PDIF input pin (connected to GND when RX1 is set)
3	RX1	I(pd)	Co-axial compatible S/PDIF input pin (supported demodulation sampling frequency of up to 96kHz)
4	RX2	I_5(pd)	5V withstand voltage TTL input level compatible S/PDIF input pin (connected to GND when RX1 is set)
5	RX3	I_5(pd)	5V withstand voltage TTL input level compatible S/PDIF input pin
6	DGND		Digital GND
7	DV_{DD}		Digital power supply (3.3V)
8	RX4	I_5(pd)	5V tolerable TTL input level compatible S/PDIF input pin
9	RX5	I_5(pd)	5V tolerable TTL input level compatible S/PDIF input pin
10	RX6	I_5(pd)	5V tolerable TTL input level compatible S/PDIF input pin
11	DV_{DD}		Digital power supply (3.3V)
12	DGND		Digital GND
13	LPF	O	PLL loop filter connection pin
14	AV_{DD}		Analog power supply (3.3V)
15	AGND		Analog GND
16	RMCK	O	R system clock output pin (VCO, 512fs, XIN)
17	RBCK	O/I	R system bit clock I/O pin (64fs)
18	DGND		Digital GND
19	DV_{DD}		Digital power supply (3.3V)
20	RLRCK	O/I	R system LR clock I/O pin (fs)
21	RDATA	O	Serial audio data output pin
22	SBCK	O	S system bit clock output pin (16fs, 32fs, 64fs, 128fs)
23	SLRCK	O	S system LR clock output pin (fs/4, fs/2, fs, 2fs)
24	SDIN	I_5	External serial audio data input pin

Pin No.	Name	I/O	Function
25	DGND		Digital GND
26	DV_{DD}		Digital power supply (3.3V)
27	XMCK	O	Oscillation amplifier clock output pin
28	XOUT	O	Output pin connected to the resonator
29	XIN	I	External clock input pin, connected to the resonator (12.288MHz/24.576MHz)
30	DV_{DD}		Digital power supply
31	DGND		Digital GND
32	MOUT	I/O	Emphasis information || Input fs monitor output || Chip address setting input pin
33	$\overline{AUDIO}$	I/O	Channel status bit 1 output || Chip address setting input pin
34	CKST	I/O	Clock switching transition period signal output || Master/slave setting input pin
35	$\overline{INT}$	I/O	Microcontroller interrupt signal output || Pins44-48 I/O setting input pin
36	RERR	O	PLL lock error, data error flag output pin
37	DO	O	CCB microcontroller I/F, read data output pin (3-state)
38	DI	I_5	CCB microcontroller I/F, write data input pin
39	CE	I_5	CCB microcontroller I/F, chip enable input pin
40	CL	I_5	CCB microcontroller I/F, clock input pin
41	XMODE	I_5	System reset input pin
42	DGND		Digital GND
43	DV_{DD}		Digital power supply (3.3V)
44	GPIO0	O/I	General-purpose I/O pin || Selector input pin (output referred to RDATA pin)
45	GPIO1	O/I	General-purpose I/O pin || Selector input pin (output referred to RLRCK pin)
46	GPIO2	O/I	General-purpose I/O pin || Selector input pin (output referred to RBCK pin)
47	GPIO3	O/I	General-purpose I/O pin || Selector input pin (output referred to RMCK pin)
48	RXOUT2	O	RX0-6 input S/PDIF through output pin 2

* Input voltage: I= -0.3 to 3.6V, I_5 = -0.3 to 5.5V
* Output voltage: O= -0.3 to 3.6V
* Pins 2, 4, 5, 8, 9, 10, 24, 38, 39, 40, and 41 have an internal pull-down resistor (pd).
  Their level is fixed when they are unselected.
* Pins 32 and 33 are input pins for chip address setting when pin 41 is held at the low level.
* Pin 34 serves as the input pin for designating as the master or slave when pin 41 is held at the low level.
* Pin 35 serves as the input pin for configuring the I/O of pins 44 to 47 when pin 41 is held at the low level.
* The DV_{DD} and AV_{DD} pins must be held at the same level and turned on and off at the same timing to preclude Latch-up conditions.

LC89058W-E Block diagram

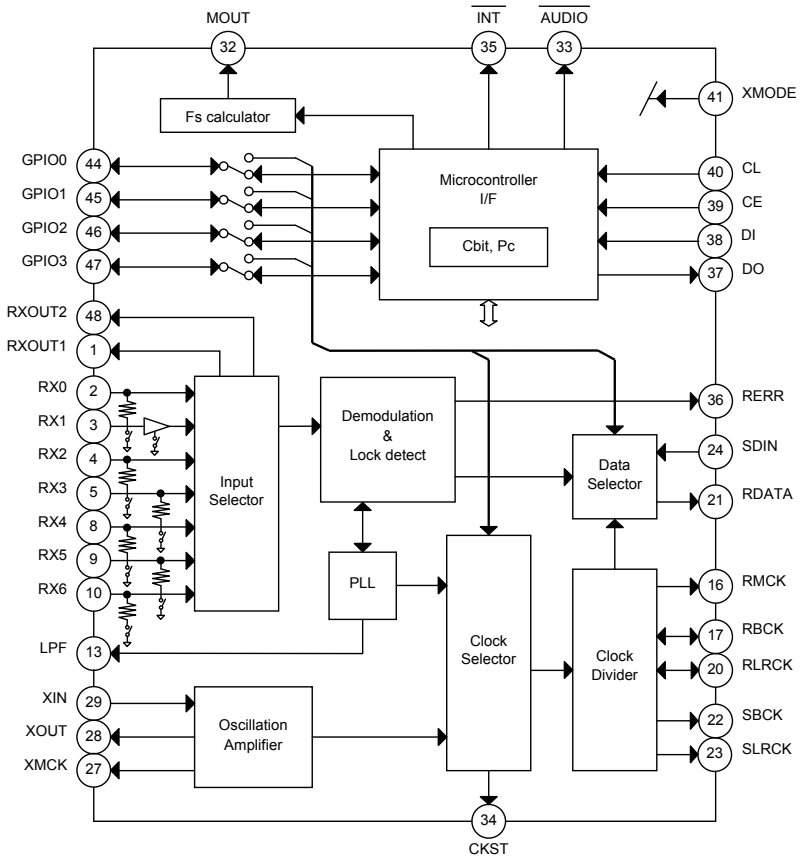

ADSP21367KSWZ2A (HDMI : U3200)

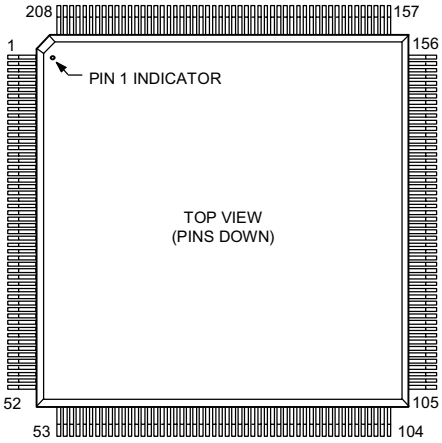

ADSP21367KSWZ2A Terminal Function

Pin No.	Signal	Pin No.	Signal	Pin No.	Signal	Pin No.	Signal
1	VDD	53	VDD	105	VDD	157	VDD
2	DATA28	54	GND	106	GND	158	VDD
3	DATA27	55	IOVDD	107	IOVDD	159	GND
4	GND	56	ADDR0	108	$\overline{\text{SDCAS}}$	160	VDD
5	IOVDD	57	ADDR2	109	$\overline{\text{SDRAS}}$	161	VDD
6	DATA26	58	ADDR1	110	SDCKE	162	VDD
7	DATA25	59	ADDR4	111	$\overline{\text{SDWE}}$	163	TDI
8	DATA24	60	ADDR3	112	$\overline{\text{WR}}$	164	$\overline{\text{TRST}}$
9	DATA23	61	ADDR5	113	SDA10	165	TCK
10	GND	62	GND	114	GND	166	GND
11	VDD	63	VDD	115	IOVDD	167	VDD
12	DATA22	64	GND	116	SDCLK0	168	TMS
13	DATA21	65	IOVDD	117	GND	169	CLK_CFG0
14	DATA20	66	ADDR6	118	VDD	170	BOOTCFG0
15	IOVDD	67	ADDR7	119	$\overline{\text{RD}}$	171	CLK_CFG1
16	GND	68	ADDR8	120	ACK	172	$\overline{\text{EMU}}$
17	DATA19	69	ADDR9	121	FLAG3	173	BOOTCFG1
18	DATA18	70	ADDR10	122	FLAG2	174	TDO
19	VDD	71	GND	123	FLAG1	175	DAI4
20	GND	72	VDD	124	FLAG0	176	DAI2
21	DATA17	73	GND	125	DAI20	177	DAI3
22	VDD	74	IOVDD	126	GND	178	DAI1
23	GND	75	ADDR11	127	VDD	179	IOVDD
24	VDD	76	ADDR12	128	GND	180	GND
25	GND	77	ADDR13	129	IOVDD	181	VDD
26	DATA16	78	GND	130	DAI19	182	GND
27	DATA15	79	VDD	131	DAI18	183	DPI14
28	DATA14	80	AVSS	132	DAI17	184	DPI13
29	DATA13	81	AVDD	133	DAI16	185	DPI12
30	DATA12	82	GND	134	DAI15	186	DPI11
31	IOVDD	83	CLKIN	135	DAI14	187	DPI10
32	GND	84	XTAL2	136	DAI13	188	DPI9
33	VDD	85	IOVDD	137	DAI12	189	DPI8
34	GND	86	GND	138	VDD	190	DPI7
35	DATA11	87	VDD	139	IOVDD	191	IOVDD
36	DATA10	88	ADDR14	140	GND	192	GND
37	DATA9	89	GND	141	VDD	193	VDD
38	DATA8	90	IOVDD	142	GND	194	GND
39	DATA7	91	ADDR15	143	DAI11	195	DPI6
40	DATA6	92	ADDR16	144	DAI10	196	DPI5
41	IOVDD	93	ADDR17	145	DAI8	197	DPI4
42	GND	94	ADDR18	146	DAI9	198	DPI3
43	VDD	95	GND	147	DAI6	199	DPI1
44	DATA4	96	IOVDD	148	DAI7	200	DPI2
45	DATA5	97	ADDR19	149	DAI5	201	CLKOUT
46	DATA2	98	ADDR20	150	IOVDD	202	$\overline{\text{RESET}}$
47	DATA3	99	ADDR21	151	GND	203	IOVDD
48	DATA0	100	ADDR23	152	VDD	204	GND
49	DATA1	101	ADDR22	153	GND	205	DATA30
50	IOVDD	102	$\overline{\text{MS1}}$	154	VDD	206	DATA31
51	GND	103	$\overline{\text{MS0}}$	155	GND	207	DATA29
52	VDD	104	VDD	156	VDD	208	VDD

W9864G2IH-6 (HDMI : U3201)

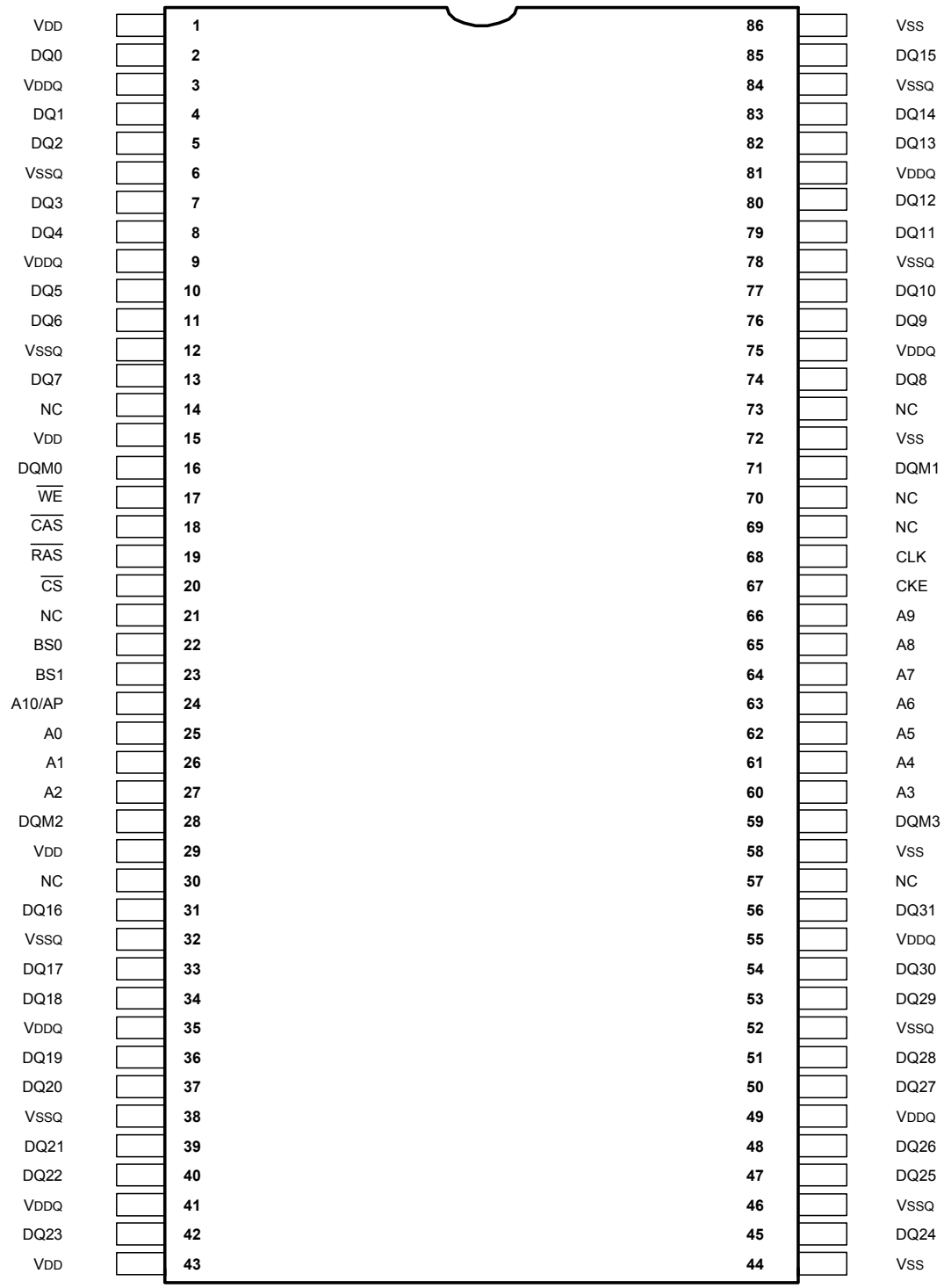

W9864G2IH-6 Block diagram

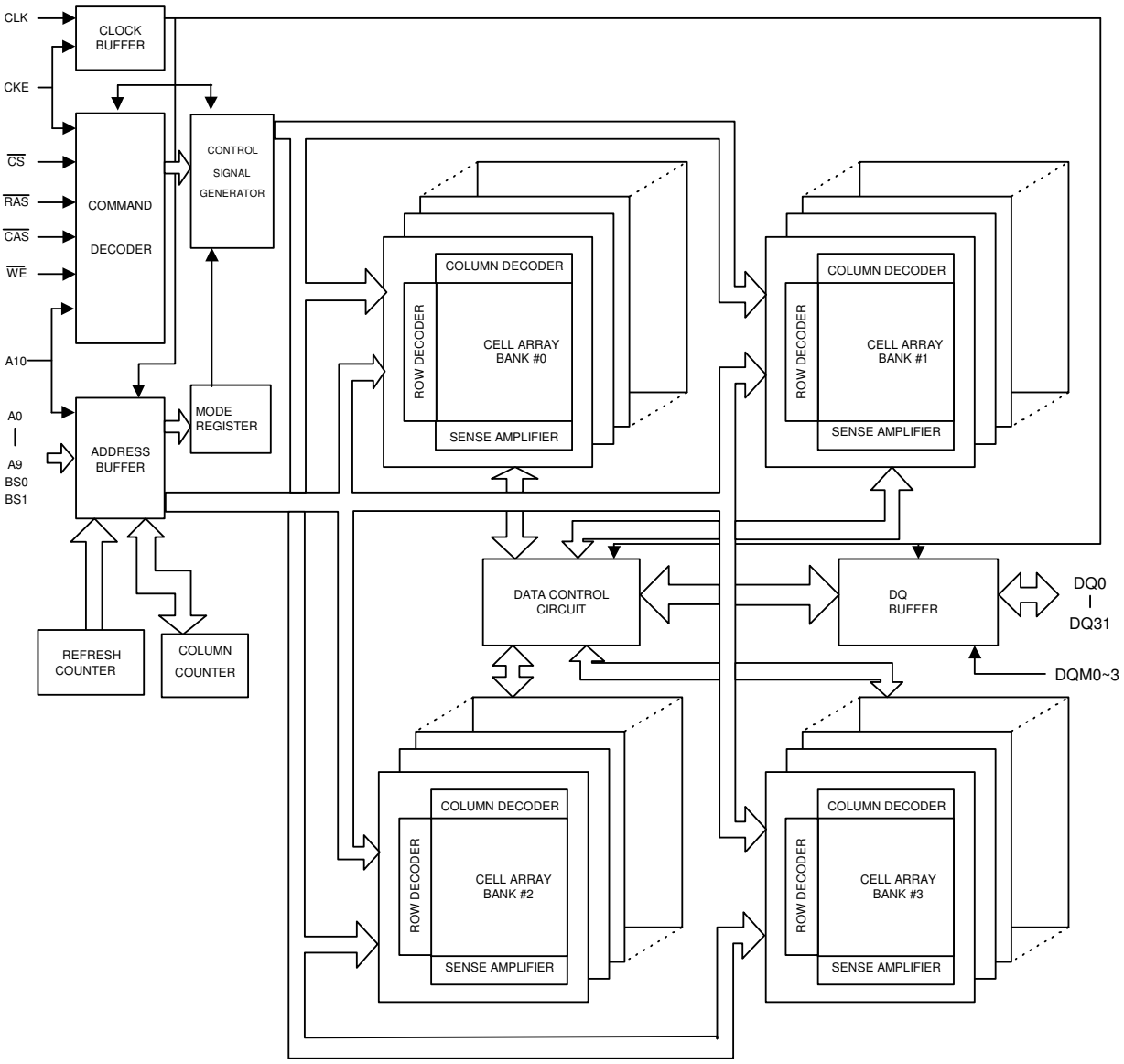

W9864G2IH-6 Pin description

PIN NUMBER	PIN NAME	FUNCTION	DESCRIPTION
24, 25, 26, 27, 60, 61, 62, 63, 64, 65, 66	A0−A10	Address	Multiplexed pins for row and column address. Row address: A0−A10. Column address: A0−A7. A10 is sampled during a precharge command to determine if all banks are to be precharged or bank selected by BS0, BS1.
22, 23	BS0, BS1	Bank Select	Select bank to activate during row address latch time, or bank to read/write during address latch time.
2, 4, 5, 7, 8, 10, 11, 13, 31, 33, 34, 36, 37, 39, 40, 42, 45, 47, 48, 50, 51, 53, 54, 56, 74, 76, 77, 79, 80, 82, 83, 85	DQ0−DQ31	Data Input/ Output	Multiplexed pins for data output and input.
20	$\overline{CS}$	Chip Select	Disable or enable the command decoder. When command decoder is disabled, new command is ignored and previous operation continues.
19	$\overline{RAS}$	Row Address Strobe	Command input. When sampled at the rising edge of the clock $\overline{RAS}$, $\overline{CAS}$ and $\overline{WE}$ define the operation to be executed.
18	$\overline{CAS}$	Column Address Strobe	Referred to $\overline{RAS}$
17	$\overline{WE}$	Write Enable	Referred to $\overline{RAS}$
16, 28, 59, 71	DQM0−DQM3	Input/Output Mask	The output buffer is placed at Hi-Z (with latency of 2) when DQM is sampled high in read cycle. In write cycle, sampling DQM high will block the write operation with zero latency.
68	CLK	Clock Inputs	System clock used to sample inputs on the rising edge of clock.
67	CKE	Clock Enable	CKE controls the clock activation and deactivation. When CKE is low, Power Down mode, Suspend mode, or Self Refresh mode is entered.
1, 15, 29, 43	V_{DD}	Power	Power for input buffers and logic circuit inside DRAM.
44, 58, 72, 86	V_{SS}	Ground	Ground for input buffers and logic circuit inside DRAM.
3, 9, 35, 41, 49, 55, 75, 81	V_{DDQ}	Power for I/O Buffer	Separated power from VDD, to improve DQ noise immunity.
6, 12, 32, 38, 46, 52, 78, 84	V_{SSQ}	Ground for I/O Buffer	Separated ground from VSS, to improve DQ noise immunity.
14, 21, 30, 57, 69, 70, 73	NC	No Connection	No connection.

EN29LV160BB (HDMI : U3202,U5101)

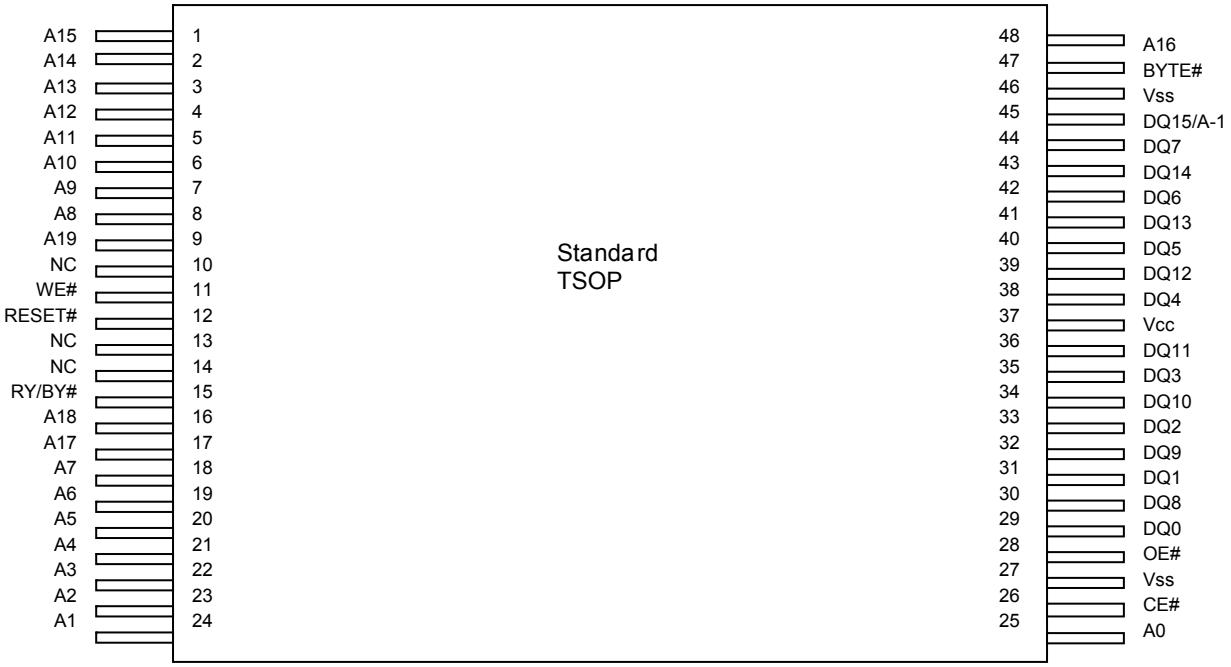

EN29LV160BB Block Diagram

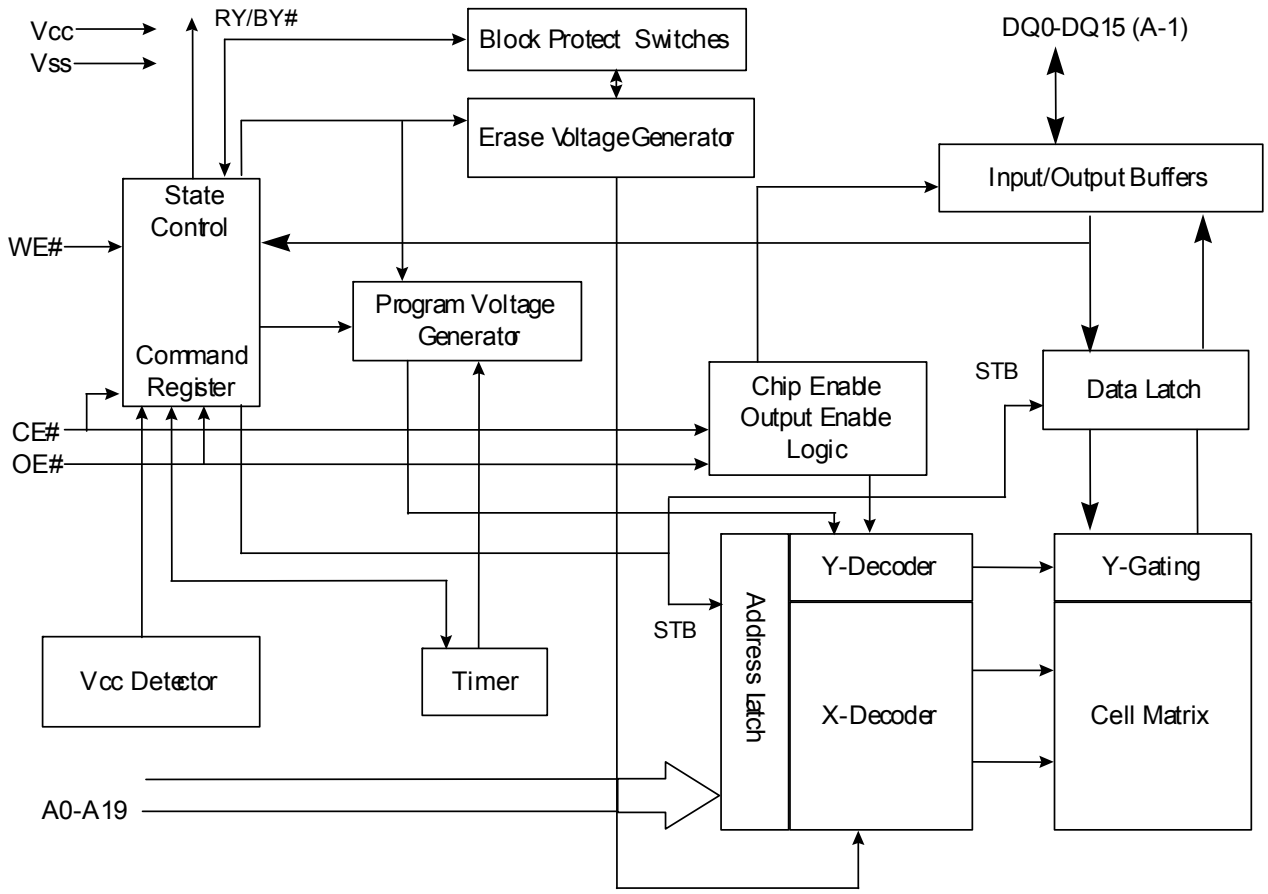

AK4424ET (HDMI : U3800,U3801)

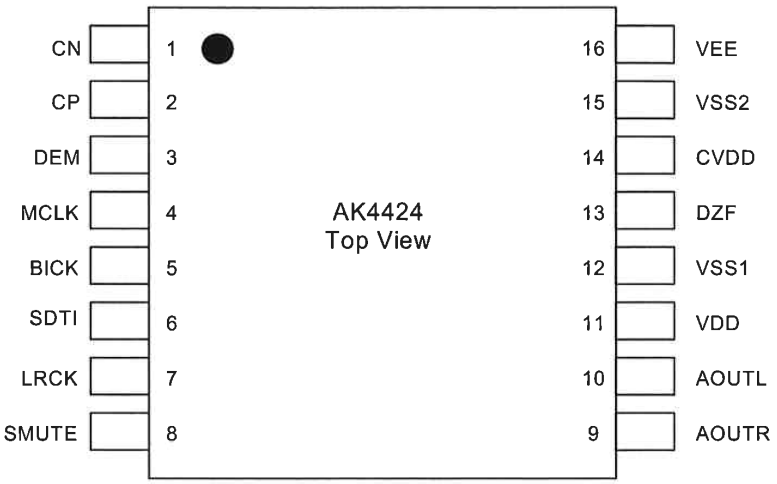

AK4424ET Block Diagram

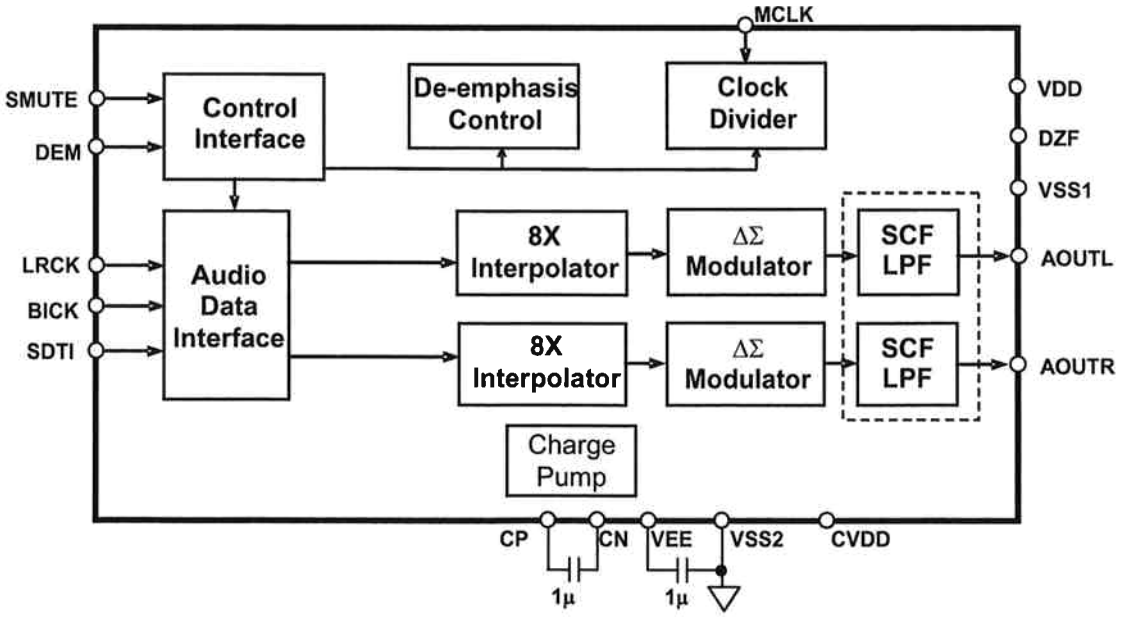

AK5358BET (HDMI : U3802)

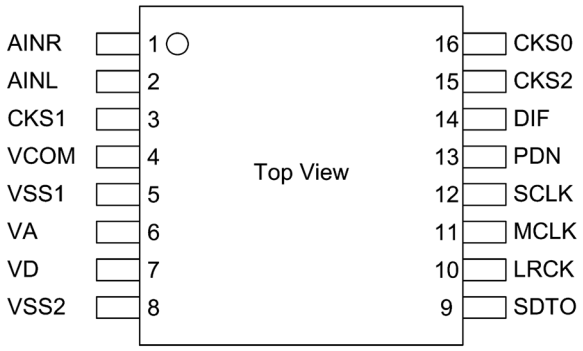

AK5358BET Pin Function

No.	Pin Name	I/O	Function
1	AINR	I	Rch Analog Input Pin
2	AINL	I	Lch Analog Input Pin
3	CKS1	I	Mode Select 1 Pin
4	VCOM	O	Common Voltage Output Pin, VA/2 Bias voltage of ADC input.
5	VSS1	-	Ground Pin
6	VA	-	Analog Power Supply Pin, 4.5 ~ 5.5V
7	VD	-	Digital Power Supply Pin, 2.7 ~ 5.5V
8	VSS2	-	Ground Pin
9	SDTO	O	Audio Serial Data Output Pin "L" Output at Power-down mode.
10	LRCK	I/O	Output Channel Clock Pin "L" Output in Master Mode at Power-down mode.
11	MCLK	I	Master Clock Input Pin
12	SCLK	I/O	Audio Serial Data Clock Pin "L" Output in Master Mode at Power-down mode.
13	PDN	I	Power Down Mode & Reset Pin "H": Power up, "L": Power down & Reset
14	DIF	I	Audio Interface Format Pin "H": 24bit I^2S Compatible, "L": 24bit MSB justified
15	CKS2	I	Mode Select 2 Pin
16	CKS0	I	Mode Select 0 Pin

AK4358VQ (HDMI : U3803)

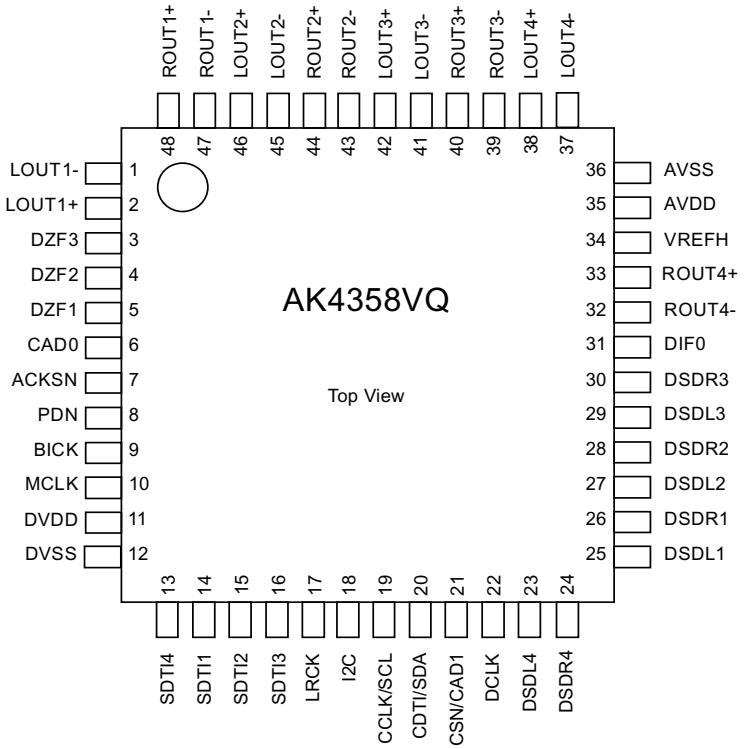

AK4358VQ Pin Function

No.	Pin Name	I/O	Function
1	LOUT1-	O	DAC1 Lch Negative Analog Output Pin
2	LOUT1+	O	DAC1 Lch Positive Analog Output Pin
3	DZF3	O	Zero Input Detect 3 Pin
4	DZF2	O	Zero Input Detect 2 Pin
5	DZF1	O	Zero Input Detect 1 Pin
6	CAD0	I	Chip Address 0 Pin
7	ACKSN	I	Auto Setting Mode Disable Pin (Pull-down Pin) "L": Auto Setting Mode, "H": Manual Setting Mode
8	PDN	I	Power-Down Mode Pin When at "L", the AK4358 is in the power-down mode and is held in reset. The AK4358 should always be reset upon power-up.
9	BICK	I	Audio Serial Data Clock Pin
10	MCLK	I	Master Clock Input Pin An external TTL clock should be input on this pin.
11	DVDD	-	Digital Power Supply Pin, +4.75~+5.25V
12	DVSS	-	Digital Ground Pin
13	SDTI4	I	DAC4 Audio Serial Data Input Pin
14	SDTI1	I	DAC1 Audio Serial Data Input Pin
15	SDTI2	I	DAC2 Audio Serial Data Input Pin
16	SDTI3	I	DAC3 Audio Serial Data Input Pin
17	LRCK	I	L/R Clock Pin
18	I2C	I	Control Mode Select Pin "L": 3-wire Serial, "H": I^2C Bus
19	CCLK/SCL	I	Control Data Clock Pin I2C = "L": CCLK (3-wire Serial), I2C = "H": SCL (I^2C Bus)
20	CDTI/SDA	I/O	Control Data Input Pin I2C = "L": CDTI (3-wire Serial), I2C = "H": SDA (I^2C Bus)
21	CSN/CAD1	I	Chip Select Pin I2C = "L": CSN (3-wire Serial), I2C = "H": CAD1 (I^2C Bus)
22	DCLK	I	DSD Clock Pin
23	DSDL4	I	DAC4 DSD Lch Data Input Pin
24	DSDR4	I	DAC4 DSD Rch Data Input Pin
25	DSDL1	I	DAC1 DSD Lch Data Input Pin
26	DSDR1	I	DAC1 DSD Rch Data Input Pin
27	DSDL2	I	DAC2DSD Lch Data Input Pin
28	DSDR2	I	DAC2 DSD Rch Data Input Pin

29	DSDL3	I	DAC3 DSD Lch Data Input Pin
30	DSDR3	I	DAC3 DSD Rch Data Input Pin
31	DIF0	I	Audio Data Interface Format 0 Pin
32	ROUT4-	O	DAC4 Rch Negative Analog Output Pin
33	ROUT4+	O	DAC4 Rch Positive Analog Output Pin
34	VREFH	I	Positive Voltage Reference Input Pin
35	AVDD	-	Analog Power Supply Pin, +4.75~+5.25V
36	AVSS	-	Analog Ground Pin
37	LOUT4-	O	DAC4 Lch Negative Analog Output Pin
38	LOUT4+	O	DAC4 Lch Positive Analog Output Pin
39	ROUT3-	O	DAC3 Rch Negative Analog Output Pin
40	ROUT3+	O	DAC3 Rch Positive Analog Output Pin
41	LOUT3-	O	DAC3 Lch Negative Analog Output Pin
42	LOUT3+	O	DAC3 Lch Positive Analog Output Pin
43	ROUT2-	O	DAC2 Rch Negative Analog Output Pin
44	ROUT2+	O	DAC2 Rch Positive Analog Output Pin
45	LOUT2-	O	DAC2 Lch Negative Analog Output Pin
46	LOUT2+	O	DAC2 Lch Positive Analog Output Pin
47	ROUT1-	O	DAC1 Rch Negative Analog Output Pin
48	ROUT1+	O	DAC1 Rch Positive Analog Output Pin

Note: All input pins except pull-down pin should not be left floating.

HY27UF081G2A-TPCB (HDMI : 3901)

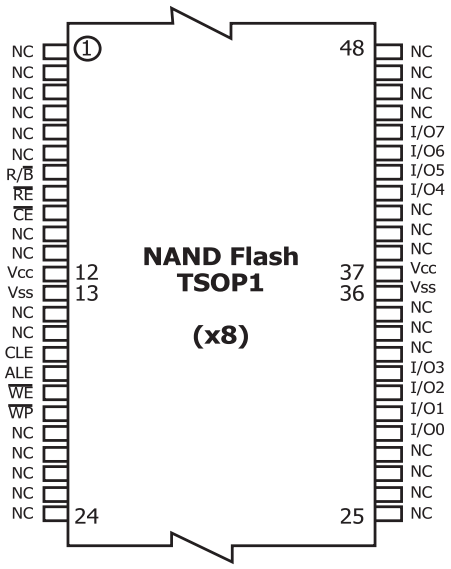

HY27UF081G2A-TPCB Pin Function

Pin Name	Description
IO0-IO7 IO8-IO15(1)	**DATA INPUTS/OUTPUTS** The IO pins allow to input command, address and data and to output data during read / program operations. The inputs are latched on the rising edge of Write Enable ($\overline{WE}$). The I/O buffer float to High-Z when the device is deselected or the outputs are disabled.
CLE	**COMMAND LATCH ENABLE** This input activates the latching of the IO inputs inside the Command Register on the Rising edge of Write Enable ($\overline{WE}$).
ALE	**ADDRESS LATCH ENABLE** This input activates the latching of the IO inputs inside the Address Register on the Rising edge of Write Enable ($\overline{WE}$).
$\overline{CE}$	**CHIP ENABLE** This input controls the selection of the device. When the device is busy $\overline{CE}$ low does not deselect the memory.
$\overline{WE}$	**WRITE ENABLE** This input acts as clock to latch Command, Address and Data. The IO inputs are latched on the rise edge of $\overline{WE}$.
$\overline{RE}$	**READ ENABLE** The $\overline{RE}$ input is the serial data-out control, and when active drives the data onto the I/O bus. Data is valid tREA after the falling edge of $\overline{RE}$ which also increments the internal column address counter by one.
$\overline{WP}$	**WRITE PROTECT** The $\overline{WP}$ pin, when Low, provides an Hardware protection against undesired modify (program / erase) operations.
R/$\overline{B}$	**READY BUSY** The Ready/Busy output is an Open Drain pin that signals the state of the memory.
VCC	**SUPPLY VOLTAGE** The VCC supplies the power for all the operations (Read, Write, Erase).
VSS	GROUND
NC	NO CONNECTION

NOTE:

1. A 0.1uF capacitor should be connected between the Vcc Supply Voltage pin and the Vss Ground pin to decouple the current surges from the power supply. The PCB track widths must be sufficient to carry the currents required during program and erase operations.

HY27UF081G2A-TPCB Block Diagram

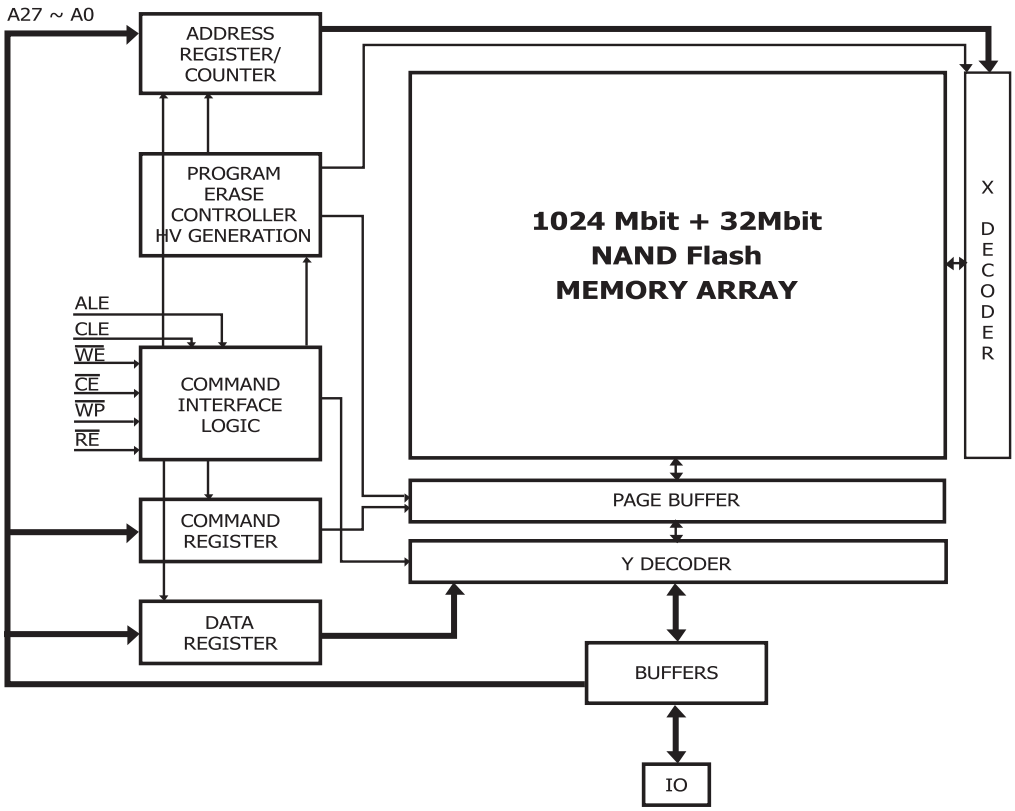

W9825G6EH-6J (HDMI : U3902)

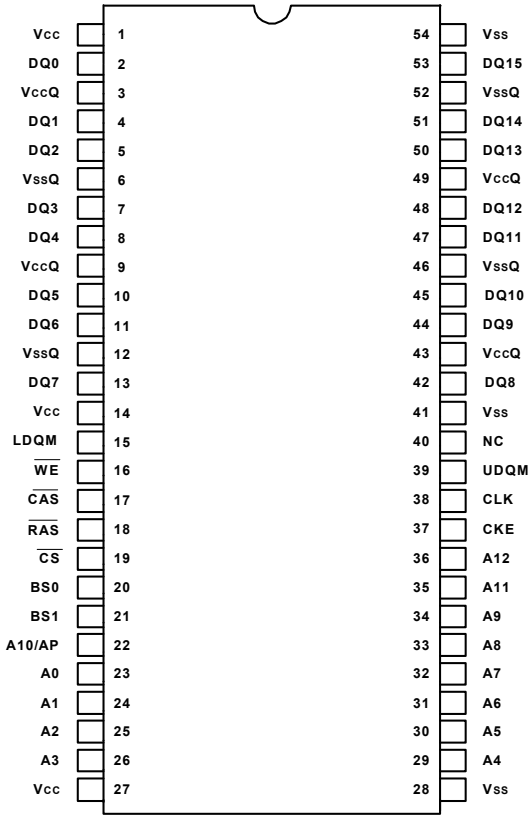

W9825G6EH-6J Block Diagram

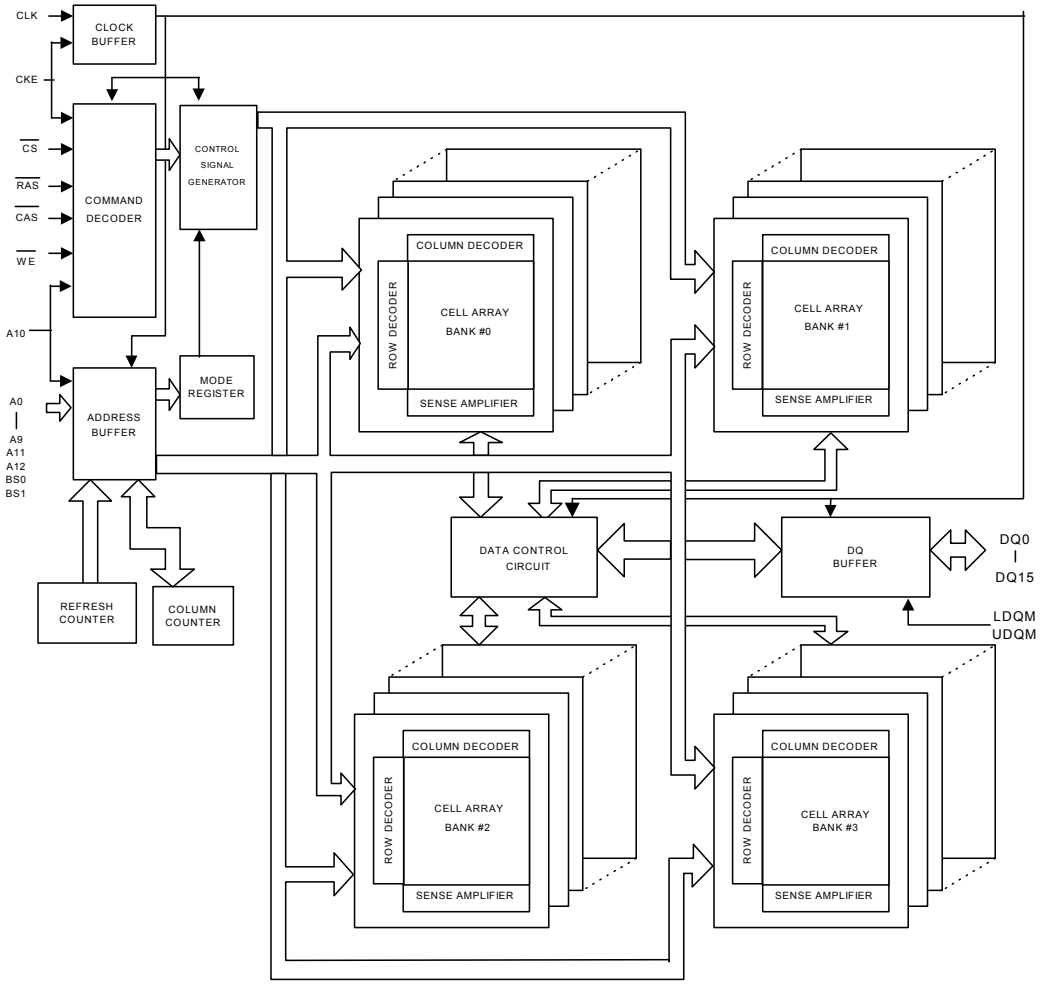

W9825G6EH-6J Pin Description

PIN NUMBER	PIN NAME	FUNCTION	DESCRIPTION
23−26, 22, 29−36	A0−A12	Address	Multiplexed pins for row and column address. Row address: A0−A12. Column address: A0−A8.
20, 21	BS0, BS1	Bank Select	Select bank to activate during row address latch time, or bank to read/write during address latch time.
2, 4, 5, 7, 8, 10, 11, 13, 42, 44, 45, 47, 48, 50, 51, 53	DQ0−DQ15	Data Input/Output	Multiplexed pins for data output and input.
19	$\overline{CS}$	Chip Select	Disable or enable the command decoder. When command decoder is disabled, new command is ignored and previous operation continues.
18	$\overline{RAS}$	Row Address Strobe	Command input. When sampled at the rising edge of the clock, $\overline{RAS}$, $\overline{CAS}$ and $\overline{WE}$ define the operation to be executed.
17	$\overline{CAS}$	Column Address Strobe	Referred to $\overline{RAS}$
16	$\overline{WE}$	Write Enable	Referred to $\overline{RAS}$
15, 39	LDQM, UDQM	Input/Output Mask	The output buffer is placed at Hi-Z(with latency of 2) when DQM is sampled high in read cycle. In write cycle, sampling DQM high will block the write operation with zero latency.
38	CLK	Clock Inputs	System clock used to sample inputs on the rising edge of clock.
37	CKE	Clock Enable	CKE controls the clock activation and deactivation. When CKE is low, Power Down mode, Suspend mode, or Self Refresh mode is entered.
1, 14, 27	V_{CC}	Power (+3.3V)	Power for input buffers and logic circuit inside DRAM.
28, 41, 54	V_{SS}	Ground	Ground for input buffers and logic circuit inside DRAM.
3, 9, 43, 49	V_{CCQ}	Power (+3.3V) for I/O Buffer	Separated power from V_{CC}, to improve DQ noise immunity.
6, 12, 46, 52	V_{SSQ}	Ground for I/O Buffer	Separated ground from V_{SS}, to improve DQ noise immunity.
40	NC	No Connection	No connection. (NC pin should be connected to GND or floating)

LAN8700 (HDMI : U4202)

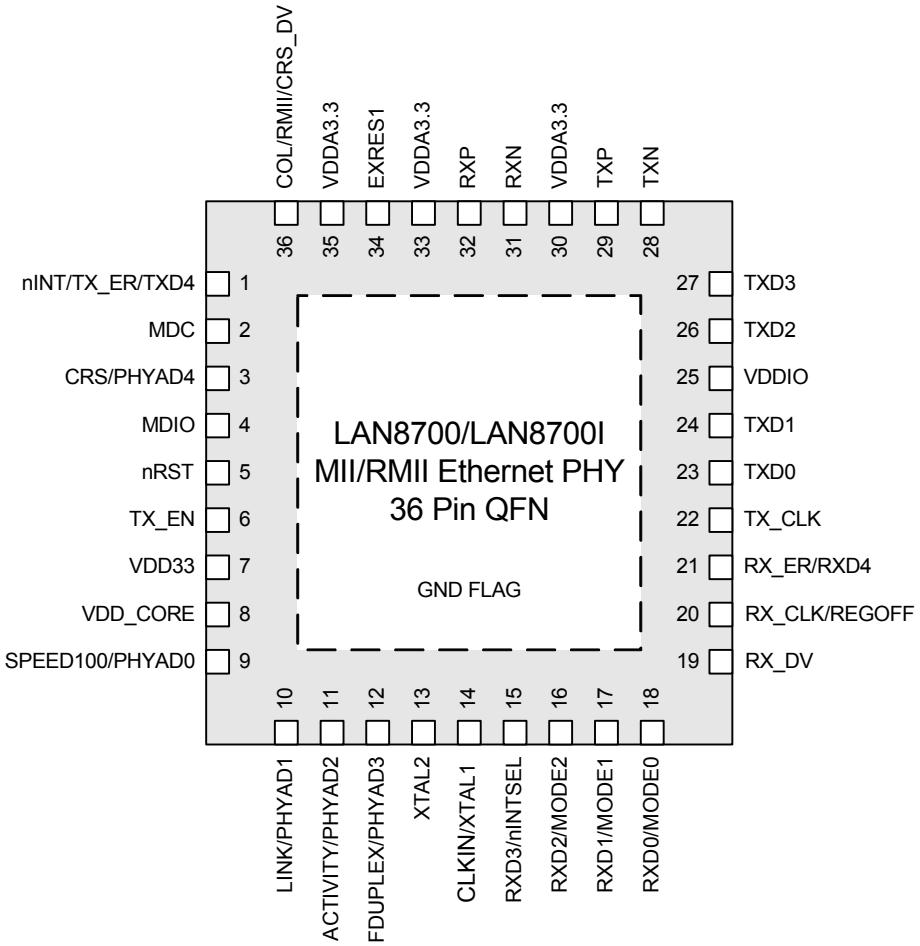

LAN8700 Block Diagram

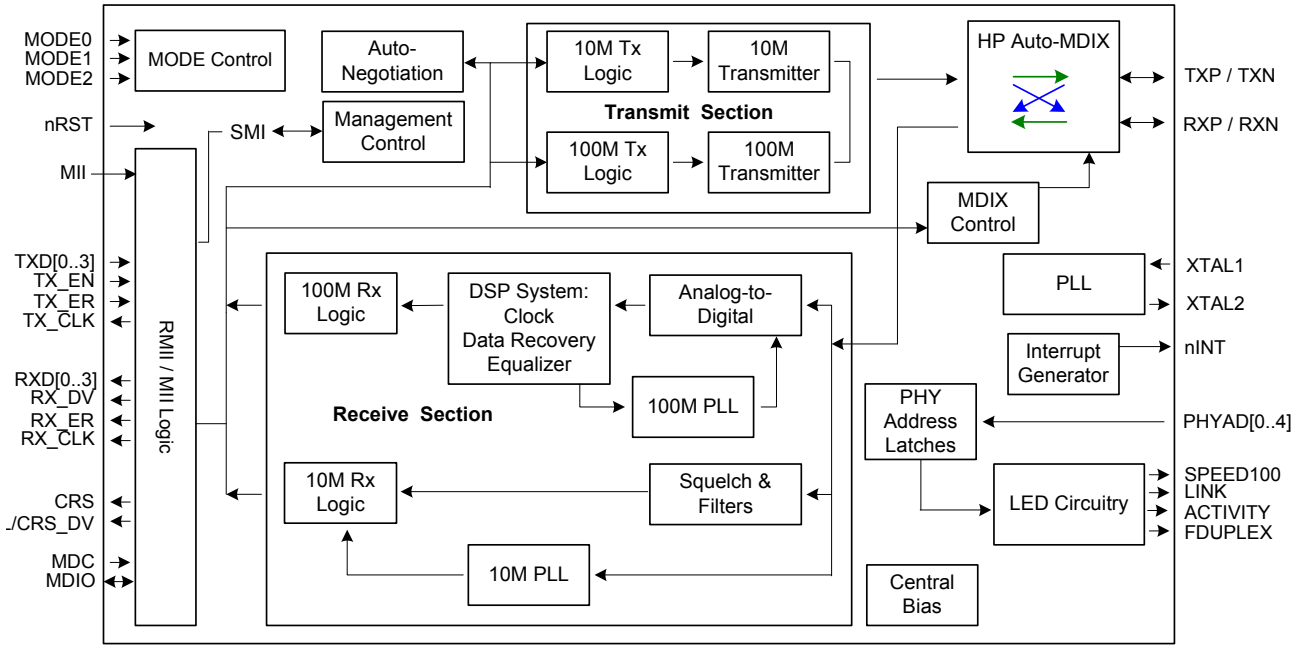

LAN8700 Pin Description

PIN NO.	PIN NAME	PIN NO.	PIN NAME
1	nINT/TX_ER/TXD4	19	RX_DV
2	MDC	20	RX_CLK/REGOFF
3	CRS/PHYAD4	21	RX_ER/RXD4
4	MDIO	22	TXCLK
5	nRST	23	TXD0
6	TX_EN	24	TXD1
7	VDD33	25	VDDIO
8	VDD_CORE	26	TXD2
9	SPEED100/PHYAD0	27	TXD3
10	LINK/PHYAD1	28	TXN
11	ACTIVITY/PHYAD2	29	TXP
12	FDUPLEX/PHYAD3	30	VDDA3.3
13	XTAL2	31	RXN
14	CLKIN/XTAL1	32	RXP
15	RXD3/nINTSEL	33	VDDA3.3
16	RXD2/MODE2	34	EXRES1
17	RXD1/MODE1	35	VDDA3.3
18	RXD0/MODE0	36	COL/RMII/CRS_DV

SA7121 (HDMI : U4203)

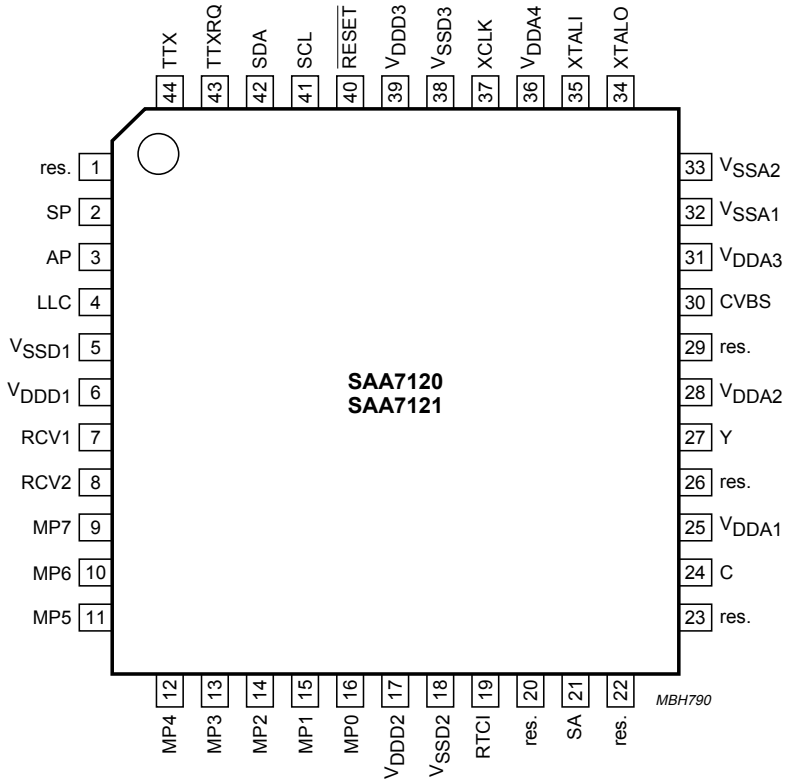

SA7121 Block Diagram

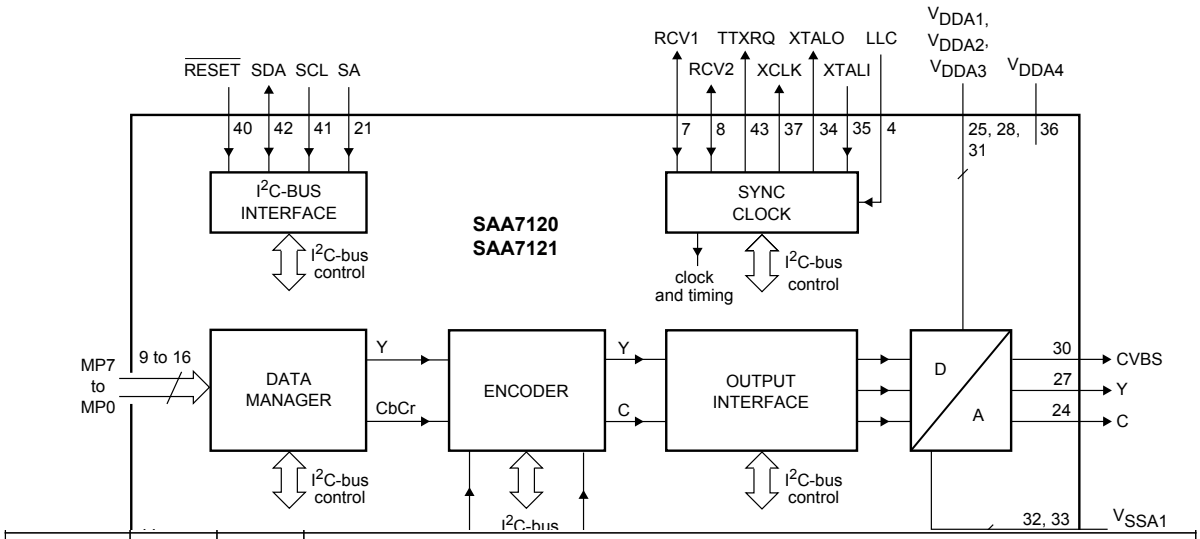

V_{SSD3}	38	I	digital ground 3
V_{DDD3}	39	I	digital supply voltage 3
$\overline{RESET}$	40	I	reset input, active LOW; after reset is applied, all digital I/Os are in input mode; the I²C-bus receiver waits for the START condition
SCL	41	I	I²C-bus serial clock input
SDA	42	I/O	I²C-bus serial data input/output
TTXRQ	43	O	teletext request output, indicating when bit stream is valid
TTX	44	I	teletext bit stream input

SA7121 Pin Description

SYMBOL	PIN	I/O	DESCRIPTION
res.	1	–	reserved
SP	2	I	test pin; connected to digital ground for normal operation
AP	3	I	test pin; connected to digital ground for normal operation
LLC	4	I	line-locked clock; this is the 27 MHz master clock for the encoder
V_{SSD1}	5	I	digital ground 1
V_{DDD1}	6	I	digital supply voltage 1
RCV1	7	I/O	raster control 1 for video port; this pin receives/provides a VS/FS/FSEQ signal
RCV2	8	I/O	raster control 2 for video port; this pin provides an HS pulse of programmable length or receives an HS pulse
MP7	9	I	MPEG port; it is an input for *"CCIR 656"* style multiplexed Cb Y, Cr data
MP6	10	I	
MP5	11	I	
MP4	12	I	
MP3	13	I	
MP2	14	I	
MP1	15	I	
MP0	16	I	
V_{DDD2}	17	I	digital supply voltage 2
V_{SSD2}	18	I	digital ground 2
RTCI	19	I	Real Time Control input; if the LLC clock is provided by an SAA7111 or SAA7151B, RTCI should be connected to pin RTCO of the decoder to improve the signal quality
res.	20	–	reserved
SA	21	I	the I^2C-bus slave address select input pin; LOW: slave address = 88H, HIGH = 8CH
res.	22	–	reserved
res.	23	–	reserved
C	24	O	analog output of the chrominance signal
V_{DDA1}	25	I	analog supply voltage 1 for the C DAC
res.	26	–	reserved
Y	27	O	analog output of VBS signal
V_{DDA2}	28	I	analog supply voltage 2 for the Y DAC
res.	29	–	reserved
CVBS	30	O	analog output of the CVBS signal
V_{DDA3}	31	I	analog supply voltage 3 for the CVBS DAC
V_{SSA1}	32	I	analog ground 1 for the DACs
V_{SSA2}	33	I	analog ground 2 for the oscillator and reference voltage
XTALO	34	O	crystal oscillator output (to crystal)
XTALI	35	I	crystal oscillator input (from crystal); if the oscillator is not used, this pin should be connected to ground
V_{DDA4}	36	I	analog supply voltage 4 for the oscillator and reference voltage
XCLK	37	O	clock output of the crystal oscillator

R2A15220FP (AUDIO : IC3003)

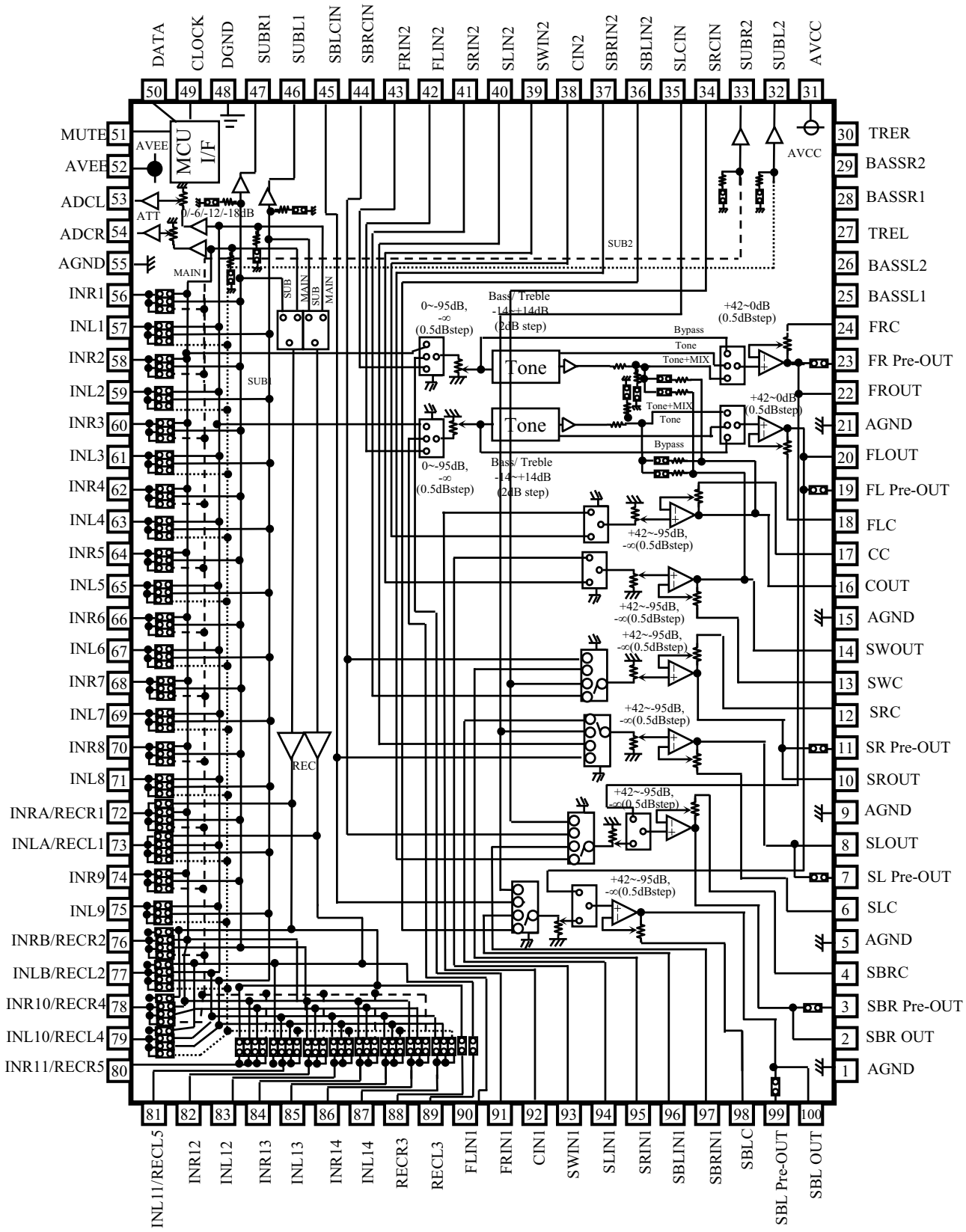

R2A15220FP Pin Function

PIN No.	Name	Function
22,20, 16,14, 10, 8, 2, 100	FROUT,FLOUT, COUT,SWOUT, SROUT, SLOUT, SBROUT,SBLOUT	Output pin of FL/FR/C/SW/SL/SR/SBL/SBR channel
23,19, 11, 7, 3, 99	FR Pre-out,FL Pre-out, SR Pre-out, SL Pre-out, SBR Pre-out,SBL Pre-out	Pre-output pin of FL/FR/SL/SR/SBL/SBR channel
24,18, 17,13, 12, 6, 4, 98	FRC,FLC, CC,SWC, SRC,SLC, SBRC,SBLC	Connects capacitor for reducing click noise of L/R/C/SW/SL/SR/SBL/SBR channel volume
1,5,9,15, 21,55,98	AGND	Analog ground of internal circuit
27,30	TREL, TRER	Frequency characteristic setting pin of L/R channel tone control (Treble)
25,26, 28,29	BASSL1,BASSL2 BASSR1,BASSR2	Frequency characteristic setting pin of L/R channel tone control (Bass)
31	AVCC	Positive power supply to internal circuit
43,42, 41,40, 39,38, 37,36	FRIN2, FLIN2, SRN2,SLIN2, SWIN2,CIN2, SBRIN2,SBLIN2	Multi Input pin of L/R/C/SW/SL/SR/SBL/SBR channel (Multi IN 1/2)
90,91, 92,93, 94,95, 96,97	FLIN1, FRIN1, CIN1,SWIN1, SLIN1,SRIN1, SBLIN1,SBRIN1	
48	DGND	Digital ground of internal circuit
49	DATA	Input pin of control data
50	CLOCK	Input pin of control clock
52	AVEE	Negative power supply to internal circuit
57,59,61,63, 65,67,69,71, 75,83,85,87	INL1,INL2, INL3,INL4, INL5,INL6,INL7,INL8, INL9,INL12,INL13,INL14	Input pin of L/R channel (Input Selector)
56,58,60,62, 64,6668,70, 74,82,84,86	INR1,INR2, INR3,INR4, INR5,INR6,INR7,INR8, INR9,INR12,INR13,INR14	
51	MUTE	Outside Mute Control PIN
44,45 34,35	SBRCIN,SBLCIN SRCIN,SLCIN	3rd Multi Input pin for SBL/SBR/SL/SR channel Volume that is able to swap SBR/SBL with SR/SL
46,47 33,32	SUBL1,SUBR1 SUBL2,SUBR2	Output pin for L/R channel SUB1/SUB2 Output
53,54	ADCL, ADCR	Output pin for L/R channel ADC
88,89	RECR3,RECL3	Output pin for L/R channel REC Output
72,73, 76,77, 78,79 80,81	INRA/RECR1,INLA/RECL1, INRB/RECR2,INLB/RECL2, INR10/RECR4,INL10/RECL4, INR11/RECR5,INL11/RECL5	Input pin of L/R channel (Input Selector)/ Output pin for L/R channel REC Output

NJW1194A (AUDIO : IC3007,IC3011)

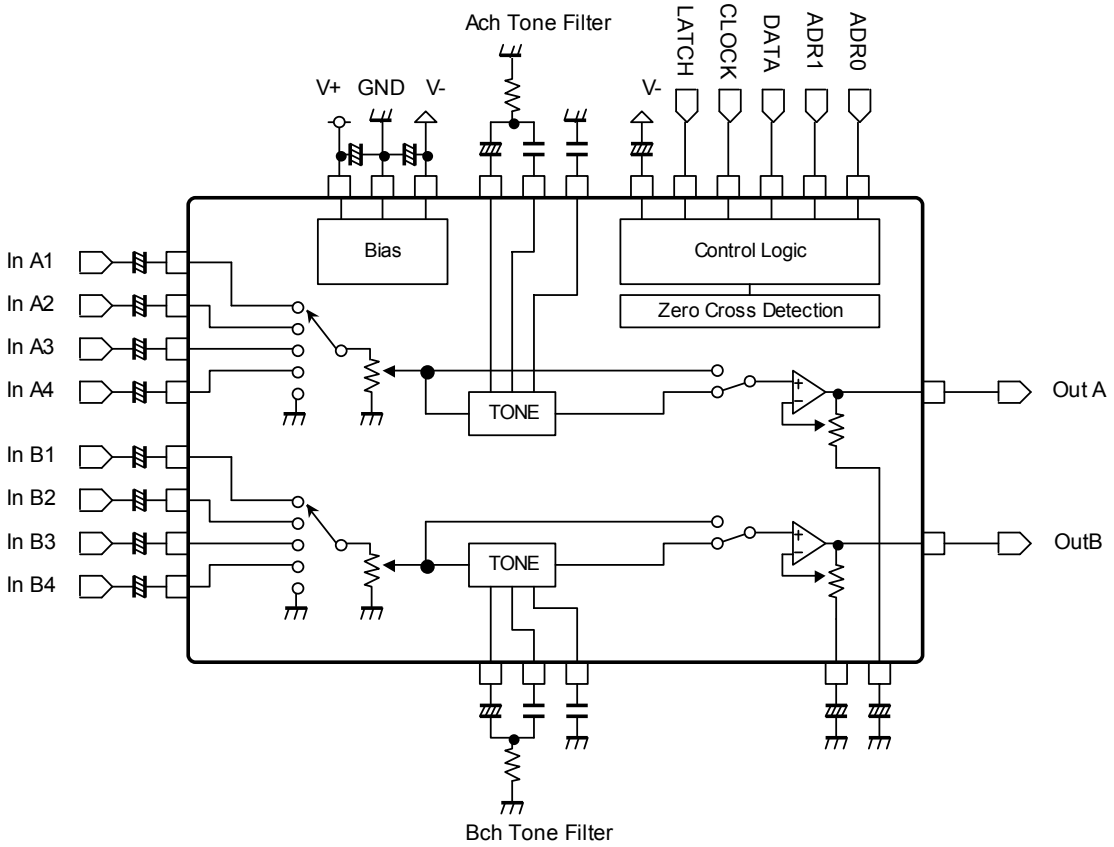

2. FL DISPLAY

FLD (19-ST-02GINK) (FRONT : Z1001)

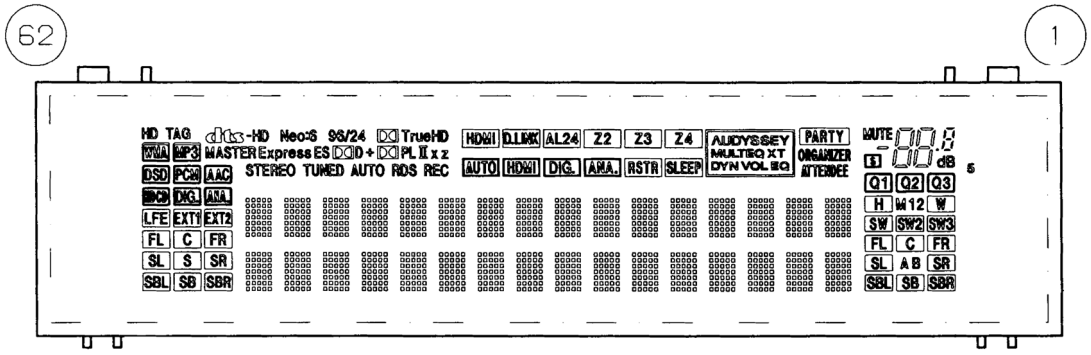

PIN CONNECTION

PIN NO.	62	61	60	59	58	57	56	55	54	53	52	51
CONNECTION -	F2	NX	NP	NP	LGND	PGND	VH	VDD	OSC	RESET	CS	CP

PIN NO.	50	49	48	47	46	45	44	43	42	41	40	39	38	37	36	35	34	33	32	31	30	29	28	27	26	25	24	23	22	21	20	19	18	17	16	15	14	13	12	11	10	9	8	7	6	5	4	3	2	1
CONNECTION	DA	CP	TSA	TSB	Q19G	Q18G	Q17G	19G	18G	17G	NX	NX	NX	NX	NX	NX	NX	NX	NX	NX	NX	NX	NX	NX	NX	NX	NX	NX	NX	NX	NX	NX	NX	NX	NX	NX	NX	NX	NX	NX	NX	NX	NX	NX	NX	NX	NX	NP	NP	F1

NOTE 1) F1,F2 --- Filament
2) NP ------ No pin
3) DL ------ Datum Line
4) NX ------ No extend pin
5) 17G~19G --- Grid
6) Q17G~Q19G --- Driver Output Port
7) LGND ---- Logic GND pin
8) PGND ---- Power GND pin
9) VH ------ High Voltage Supply pin
10) VDD ----- Logic Voltage Supply pin
11) OSC ----- Pin for self-oscillation
12) RESET --- Reset Input
13) CS ------ Chip Select Input pin
14) CP ------ Shift Register Clock
15) DA ------ Serial Data Input
16) TSA,B --- Test pin
17) Solder composition is Sn-3Ag-0.5Cu.

GRID ASSIGNMENT

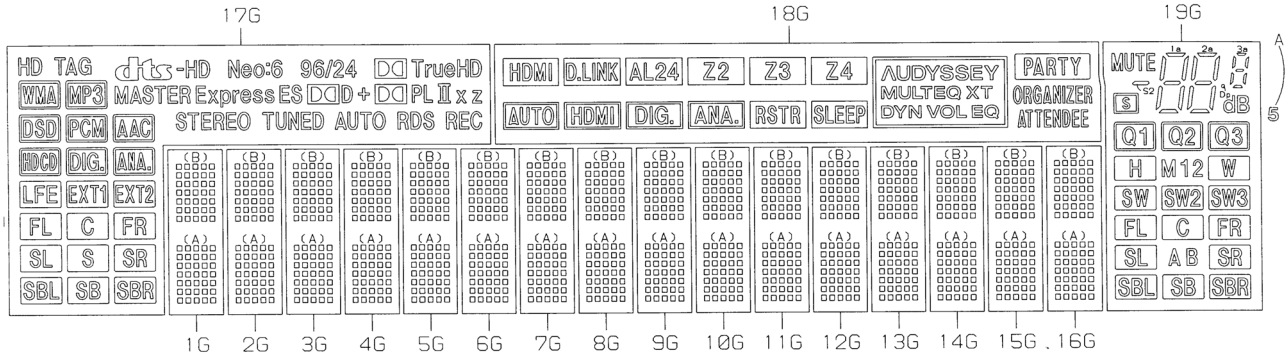

NOTE) The mark "A" is used to distinguish between very similar displays. This mark is electrically isolated from the wiring pattern.

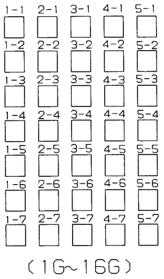

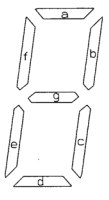

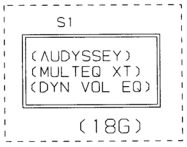

ANODE CONNECTION

	1G~16G	17G	18G	19G
D0A	1-1A	-	-	-
D1A	2-1A	-	-	-
D2A	3-1A	-	-	-
D3A	4-1A	-	-	-
D4A	5-1A	-	-	-
D5A	1-2A	-	-	-
D6A	2-2A	-	-	-
D7A	3-2A	-	-	-
D8A	4-2A	-	-	-
D9A	5-2A	-	-	-
D10A	1-3A	-	-	-
D11A	2-3A	-	-	dB
D12A	3-3A	-	-	Dp
D13A	4-3A	-	-	3d
D14A	5-3A	-	-	3e
D15A	1-4A	-	-	3c
D16A	2-4A	-	-	3g
D17A	3-4A	-	-	3f
D18A	4-4A	-	-	3b
D19A	5-4A	-	-	3a
D20A	1-5A	-	-	2d
D21A	2-5A	-	-	2e
D22A	3-5A	-	-	2c
D23A	4-5A	-	-	2g
D24A	5-5A	-	-	2f
D25A	1-6A	-	-	2b
D26A	2-6A	-	-	2a
D27A	3-6A	-	-	1d
D28A	4-6A	Z	-	1e
D29A	5-6A	X	-	1c
D30A	1-7A	II	-	1g
D31A	2-7A	PL	-	1f
D32A	3-7A	+	-	1b
D33A	4-7A	ES	-	1a
D34A	5-7A	HD	-	S2

	1G~16G	17G	18G	19G
D0B	1-1B	REC	-	-
D1B	2-1B	RDS	-	-
D2B	3-1B	AUTO	-	-
D3B	4-1B	TUNED	-	-
D4B	5-1B	DD	-	-
D5B	1-2B	DDD	-	-
D6B	2-2B	DD TrueHD	-	-
D7B	3-2B	96/24	-	-
D8B	4-2B	Express	-	-
D9B	5-2B	Neo:6	-	-
D10B	1-3B	STEREO	-	-
D11B	2-3B	MASTER	-	-
D12B	3-3B	-HD	-	MUTE
D13B	4-3B	dts	ATTENDEE	S
D14B	5-3B	TAG	ORGANIZER	Q3
D15B	1-4B	MP3	PARTY	Q2
D16B	2-4B	WMA	EQ	Q1
D17B	3-4B	AAC	VOL	W
D18B	4-4B	PCM	DYN	2
D19B	5-4B	DSD	XT	1
D20B	1-5B	ANA.	MULTEQ	M
D21B	2-5B	DIG.	AUDYSSEY	H
D22B	3-5B	HDCD	S1	SW3
D23B	4-5B	EXT2	SLEEP	SW2
D24B	5-5B	EXT1	RSTR	SW
D25B	1-6B	LFE	ANA.	FR
D26B	2-6B	FR	DIG.	C
D27B	3-6B	C	HDMI	FL
D28B	4-6B	FL	AUTO	SR
D29B	5-6B	SR	Z4	B
D30B	1-7B	S	Z3	A
D31B	2-7B	SL	Z2	SL
D32B	3-7B	SBR	AL24	SBR
D33B	4-7B	SB	D.LINK	SB
D34B	5-7B	SBL	HDMI	SBL

VFD (GP1261AI) (FRONT : Z1002)

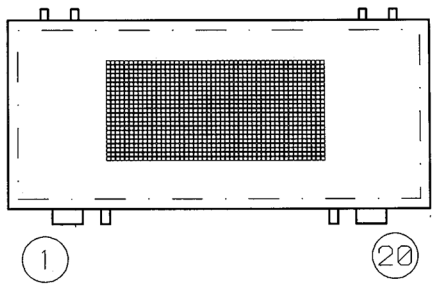

PIN CONNECTION

PIN NO.	1	2	3	4	5	6	7	8	9	10	11	12	13	14	15	16	17	18	19	20
CONNECTION	F-	NP	NC	NC	NC	NC	TEST	INT	RESET	DIO	CLK	OSC	VDD	LGND	PGND	VHD	PLGND	VDD	NC	F+

NOTE
1) F-,F+ --- Filament
2) NP ------ No pin
3) DL ------ Datum Line
4) VDD ----- Logic Voltage Supply pin
5) LGND ---- Logic GND pin
6) PGND ---- Power GND pin
7) VH ------ High Voltage Supply pin
8) OSC ----- Pin for self-oscillation
9) $\overline{CS}$ ------ Chip Select Input pin
10) CLK ----- Shift Register Clock
11) DIO ------ Serial Data Input
12) $\overline{RESET}$ --- Reset Input
13) INT ---- Int pin
14) TEST --- Test pin
15) Solder composition is Sn-3Ag-0.5Cu.
16) NC ------ No connection
(NC pin should be electrically open on the PC board)

PATTERN DETAIL

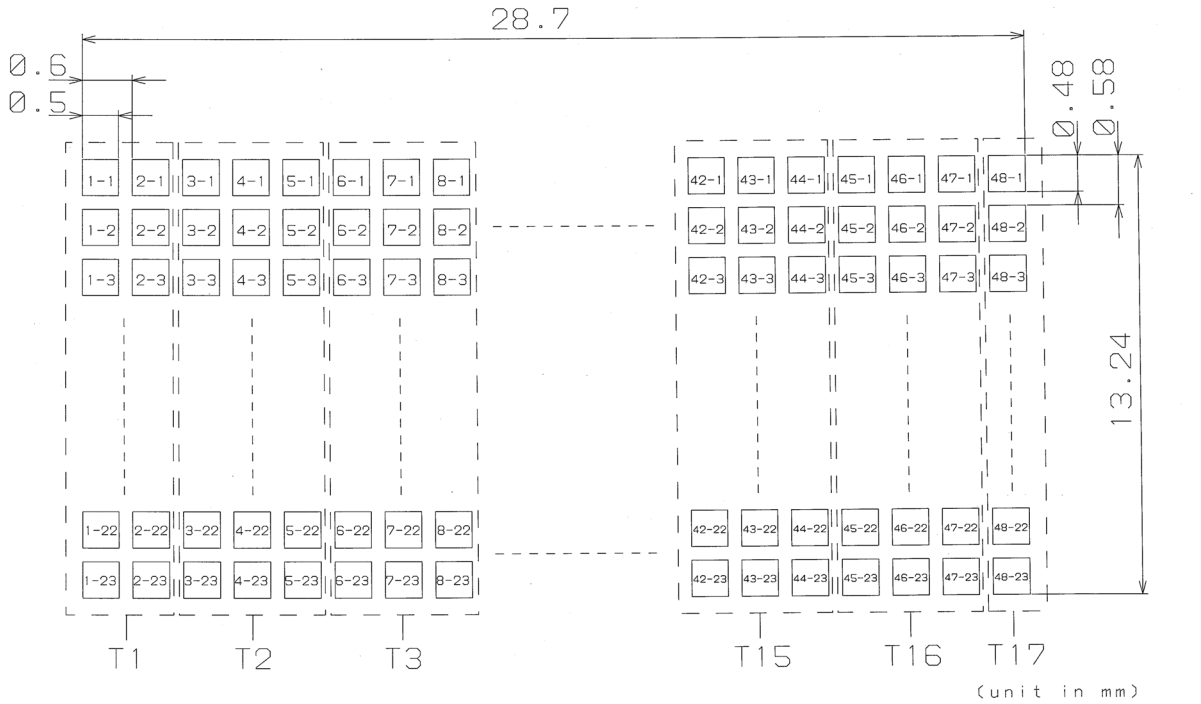

COLOR OF ILLUMINATION

Green (G. x=0.24,y=0.41) - - - - - All graphics.

PARTS LIST OF P.W.B. UNIT

* Parts for which "nsp" is indicated on this table cannot be supplied.
* The parts listed below are for maintenance only, might differ from the parts used in the unit in appearances or dimensions.

Note: The symbols in the column "Remarks" indicate the following destinations.
U : North America model N : Europe model

A.VIDEO P.W.B UNIT ASSY

	Ref. No.	Part No.	Part Name	Remarks	Q'ty	New
SEMICONDUCTORS GROUP						
	D1003,1004	251310004507S	CG0603MLC-12LE			
	D2001,2002	00D2760794900	KDS160-RTK/P			
	D2005,2006	00D2760794900	KDS160-RTK/P			
	D2009	00D2760750902	RB521S-30TE61 +REF			
	U1002	00D2631225906	NJM2581M-TE1			
	U2001	00D2622012908	BU4052BCF-E2 +C			
	U2003	235810046603S	AVDM-2000			
	U2004	231310009508S	PQ033DNA1ZPH			
	U2005	232810005504S	BD7628F-E2			
	U2007,2008	232810005504S	BD7628F-E2			
	Q2001,2002	00D2710312905	KTA1504S-GR-RTK/P			
	Q2005	00D2690144905	DTC114YKA-T146 +C			
	Q2006	00D2690192902	KRC102S-RTK/P (10K-10K)			
	Q2009,2010	00D2690192902	KRC102S-RTK/P (10K-10K)			
CAPACITORS GROUP						
	C1001-1012	132450038507S	CK73X5R0J106MT(2125)			
	C1031	nsp	CK73B1H103KT (1608) +1608			
	C1032	00D2544718937	CE04W1C470MT(GR)			
	C1033-1035	nsp	CK73B1H103KT (1608) +1608			
	C1036	00D2544718937	CE04W1C470MT(GR)			
	C1037,1038	nsp	CK73B1H103KT (1608) +1608			
	C2001,2002	nsp	CK73B1H103KT (1608) +1608			
	C2005-2008	00D2544722981	CE04W1H100MT(GR)			
	C2009,2010	00D2544718940	CE04W1C101MT(GR)			
	C2013,2014	nsp	CK73B1H103KT (1608) +1608			
	C2017,2018	00D2544718937	CE04W1C470MT(GR)			
	C2019,2020	nsp	CK73B1E473KT +1608			
	C2023	nsp	CK73B1H103KT (1608) +1608			
	C2024	nsp	CK73B1E104KT +1608			
	C2027,2028	nsp	CK73B1E473KT +1608			
	C2031,2032	00D2544722949	CE04W1H010MT(GR)			
	C2039,2040	nsp	CK73B1E473KT +1608			
	C2043,2044	nsp	CK73B1H103KT (1608) +1608			
	C2045,2046	nsp	CK73B1E104KT +1608			
	C2047	00D2544722981	CE04W1H100MT(GR)			
	C2048-2050	nsp	CK73B1E104KT +1608			
	C2051	00D2544718937	CE04W1C470MT(GR)			
	C2052	nsp	CK73B1E104KT +1608			

	Ref. No.	Part No.	Part Name	Remarks	Q'ty	New
	C2053	nsp	CK73B1A105KT +1608			
	C2055,2056	nsp	CK73B1E104KT +1608			
	C2058	nsp	CK73B1A105KT +1608			
	C2059	nsp	CK73B1E104KT +1608			
	C2060	00D2544722981	CE04W1H100MT(GR)			
	C2061-2064	nsp	CK73B1E104KT +1608			
	C2065	00D2544718937	CE04W1C470MT(GR)			
	C2066,2067	nsp	CK73B1E104KT +1608			
	C2068	00D2544722981	CE04W1H100MT(GR)			
	C2070,2071	nsp	CK73B1E104KT +1608			
	C2073	00D2544722981	CE04W1H100MT(GR)			
	C2074	00D2544718937	CE04W1C470MT(GR)			
	C2075,2076	nsp	CK73B1H103KT (1608) +1608			
	C2077,2078	00D2544718937	CE04W1C470MT(GR)			
	C2079	nsp	CC73CH1H221JT +1608			
OTHERS PARTS GROUP						
	N2001	nsp	19P SOCKET(C125Z2)			
	N2002	nsp	17P SOCKET(C125Z2)			
	N2003	nsp	13P SOCKET(C125Z2)			
	N2004	nsp	4P BASE(ANGLE)			
	K1001-1003	00D2048756000	6P PIN JACK(MSD-246V)-NI-GBR			
	K2001	643010081007S	4P PIN JACK(RCA-405BE-31)-NI-Y			
	K2003	643010082000S	2P PIN JACK(RCA-207B1-05)-NI-Y			
	K2005	643010083003S	1P PIN JACK(RCA-107AY)-NI-Y			
	B2001	nsp	80MM/1P YPT-012=YPT-012 BK1007#24			
	B2003	nsp	80MM/1P YPT-012=YPT-012 BK1007#24			
	B2005	nsp	90MM/1P YPT-012=YPT-012 BK1007#24			

REG/CNT P.W.B UNIT ASSY

	Ref. No.	Part No.	Part Name	Remarks	Q'ty	New
SEMICONDUCTORS GROUP						
	IC001	00D2631289900	AZ4580MTR-E1	U		
	IC103	00D2630809006	NJM7805FA(S)			
	IC104	00D2630554005	NJM7905FA			
	IC105	00D2630809006	NJM7805FA(S)			
	IC106	00D2630810008	NJM7808FA(S)			
	IC107	00D2630503001	NJM7908FA			
	IC108	231010094103S	NJM2388F09	N		
	IC109	231310009508S	PQ033DNA1ZPH	U		
	IC401	00D2631289900	AZ4580MTR-E1			
	IC402	00D2631289900	AZ4580MTR-E1	U		
	IC403	231310009508S	PQ033DNA1ZPH			
	IC404	236810090504S	ILX3232D			
	IC405,406	00D2631286903	PQ120DNA1ZPH			
	Q401,402	00D2690184907	KRA102S-RTK/P (10K-10K)			
	Q403,404	00D2690192902	KRC102S-RTK/P (10K-10K)			
	Q405	00D2730464901	KTC3875S-GR-RTK/P			
	Q406	00D2690184907	KRA102S-RTK/P (10K-10K)			
	D114	00D2760723900	RB721Q-40			
	D115,116	00D2760401905	1SS133T77 (TAPE)			
	D117,118	00D2760723900	RB721Q-40			
	D119-121	00D2760401905	1SS133T77 (TAPE)			
	D122	00D2760723900	RB721Q-40			
	D123	00D2760401905	1SS133T77 (TAPE)	N		
	D124-134	203050021504S	1N4007			
	D137-145	203050021504S	1N4007			
	D401,402	00D2760794900	KDS160-RTK/P			
	ZD117,118	00D2760762932	MTZJ33B T77			
	ZD401,402	00D2760665903	MTZJ16B T77			
CAPACITORS GROUP						
	C061	nsp	CC73CH1H330JT +1608	U		
	C062,063	00D2544722981	CE04W1H100MT(GR)	U		
	C064	nsp	CC73CH1H330JT +1608	U		
	C065	nsp	CK73B1E104KT +1608	U		
	C066	nsp	CK73B1A105KT +1608	U		
	C067	nsp	CC73CH1H330JT +1608	U		
	C068-070	00D2544722981	CE04W1H100MT(GR)	U		
	C071	nsp	CK73B1H104KT +2125	U		
	C072	nsp	CC73CH1H330JT +1608	U		
	C073	nsp	CK73B1A105KT +1608	U		
	C074	nsp	CK73B1E104KT +1608	U		
	C075	00D2544722981	CE04W1H100MT(GR)	U		
	C076-078	nsp	CC73CH1H101JT +1608	U		
	C079	nsp	CK73B1E104KT +1608	U		
	C080,081	00D2544722981	CE04W1H100MT(GR)	U		
	C126	134050102200S	CE04W1C332MC(SHL)			

	Ref. No.	Part No.	Part Name	Remarks	Q'ty	New
	C127,128	00D2544722981	CE04W1H100MT(GR)			
	C129	134050102200S	CE04W1C332MC(SHL)			
	C130	00D2544718940	CE04W1C101MT(GR)			
	C131	00D2544722981	CE04W1H100MT(GR)			
	C132	00D2544718940	CE04W1C101MT(GR)			
	C133	134050103203S	CE04W1E472MC(MHA)			
	C134	00D2544718940	CE04W1C101MT(GR)			
	C135	134050103203S	CE04W1E472MC(MHA)			
	C136	00D2544718940	CE04W1C101MT(GR)	N		
	C137	00D2544722981	CE04W1H100MT(GR)	N		
	C138	134050103203S	CE04W1E472MC(MHA)			
	C142-144	133050083511S	CQ93M2A104JT(PEF)			
	C146-148	133050083511S	CQ93M2A104JT(PEF)			
	C401,402	nsp	CK73B1E104KT +1608			
	C403,404	nsp	CK73B1E104KT +1608	U		
	C405,406	00D2544722981	CE04W1H100MT(GR)			
	C407,408	00D2544722981	CE04W1H100MT(GR)	U		
	C414	nsp	CK73B1A105KT +1608			
	C424	nsp	CK73B1A105KT +1608			
	C426	nsp	CK73B1E104KT +1608			
	C427	nsp	CK73B1E104KT +1608	U		
	C428-431	00MEJ10602511	10UF/ 25V			
	C432-435	00MEJ10602511	10UF/ 25V	U		
	C436	nsp	CK73B1E104KT +1608			
	C437,438	nsp	CC73CH1H471JT +1608			
	C439,440	nsp	CC73CH1H471JT +1608	U		
	C441,442	nsp	CK73B1E104KT +1608			
	C443	nsp	CC73CH1H471JT +1608	U		
	C444	nsp	CK73B1E104KT +1608	U		
	C445,446	nsp	CK73B1E104KT +1608			
	C448-451	nsp	CK73B1E104KT +1608			
	C452	00D2544722981	CE04W1H100MT(GR)			
	C453	nsp	CK73B1E104KT +1608			
	C454,455	00D2544722981	CE04W1H100MT(GR)			
	C456	nsp	CC73CH1H330JT +1608			
	C457,458	00D2544722981	CE04W1H100MT(GR)			
	C459	nsp	CC73CH1H330JT +1608			
	C460,461	nsp	CK73B1E104KT +1608			
	C467-469	nsp	CK73B1E104KT +1608			
	C470	nsp	CK73B0J475KT +1608			
OTHERS PARTS GROUP						
	BKT10	nsp	M3 TAP SIDE TERMINAL			
	CLAMP101	nsp	STYLE PIN(SJRC-2)			
	CN004	nsp	15P SOCKET(C125Z2)			
	CN005	nsp	19P SOCKET(C125Z2)			
	CN009	nsp	17P SOCKET(C125Z2)			
	CN010	nsp	15P SOCKET(C125Z2)			
	CN011	nsp	25P SOCKET(C125Z2)			

	Ref. No.	Part No.	Part Name	Remarks	Q'ty	New
	CN013	nsp	13P 120mm 20010HS-CKM2002HV			
	CN015	nsp	4P 160mm 20010HS-CKM2002HV			
	CN100	nsp	13P SOCKET(C125Z2)			
	CN101	nsp	11P SOCKET(C125Z2)			
	CN104	nsp	27P SOCKET(C125Z2)			
	CN401	nsp	11P SOCKET(C125Z2)			
	CN402	nsp	15P PLUG(C125Z1)			
	CN403	nsp	19P PLUG(C125Z1)			
	CP003	nsp	11P PLUG(C125Z1)			
	CP004	nsp	25P PLUG(C125Z1)			
	CP006	nsp	19P PLUG(C125Z1)			
	CP007	nsp	17P PLUG(C125Z1)			
	CP008	nsp	15P PLUG(C125Z1)			
	CP100	nsp	13P PLUG(C125Z1)			
	CP101	nsp	11P PLUG(C125Z1)			
	CP102	nsp	4P BASE(5267)			
	CP104	nsp	3P BASE(5267)			
	CP105	nsp	19P PLUG(C125Z1)			
	CP106	nsp	17P PLUG(C125Z1)			
	CP107	nsp	13P PLUG(C125Z1)			
	CP108	nsp	19P PLUG(C125Z1)			
	CP109	nsp	17P PLUG(C125Z1)			
	CP110	nsp	33P PLUG(C125Z1)			
	CP111	nsp	19P PLUG(C125Z1)			
	CP112	nsp	17P PLUG(C125Z1)			
	CP113,114	nsp	13P PLUG(C125Z1)			
	CP115	nsp	33P PLUG(C125Z1)			
	CP13A	nsp	13P BASE(ANGLE)			
	CP401	nsp	11P PLUG(C125Z1)			
	CP801	nsp	13P FFC BASE(CN.FPC 1.25MM)	U		
⚠	F104-108	nsp	L=20mm 250V/T3.15A			
	F104A-108A	nsp	FUSE CLIP(TAPE)			
	F104B-108B	nsp	FUSE CLIP(TAPE)			
	JACK401	643010089001S	MX JACK(DIN-901B)			
	JACK402	643010090001S	SIRIUS JACK(YKF51-5397N)-AU-BLK	U		
	JACK403	643010084006S	2P PINJACK(RCA-206B)-NI-O			
	JACK404	643010091004S	9P D-SUB(L103-09009-003-0)			
	JACK405,406	643010086002S	MINI JACK(PJ-308-02)			
		nsp	LABEL FUSE T3.15AL/250V	F104		

SPK/SMPS P.W.B UNIT ASSY

	Ref. No.	Part No.	Part Name	Remarks	Q'ty	New
			SEMICONDUCTORS GROUP			
⚠	IC100	00D2623047008	PC123Y22			
⚠	IC102	231010091708S	TOP258MG			
	IC116	212050010508S	KIA2431AP			
	TR100-102	00D2730468907	KTC3199-GR-AT/P			
	D100,101	203050021504S	1N4007			
	D102	203050021504S	1N4007			
	D103	203050018706S	D25SC6M			
	D104-106	203050021504S	1N4007			
	D108	203050019501S	AP01C-V0			
	D109,110	203050021504S	1N4007			
	D112	00D2760401905	1SS133T77 (TAPE)			
	ZD100	00D2760645923	MTZJ22A T77			
	ZD101	00D2760762958	MTZJ39B T77	U		
	ZD102	00D2760645923	MTZJ22A T77	U		
	ZD103	00D2760762958	MTZJ39B T77	U		
	ZD104	00D2760645923	MTZJ22A T77			
	ZD105	00D2760762958	MTZJ39B T77	U		
	ZD106,107	00D2760645923	MTZJ22A T77			
	ZD108,109	00D2760762958	MTZJ39B T77	U		
	ZD110	00D2760645923	MTZJ22A T77	U		
	ZD110	00D2760762958	MTZJ39B T77	N		
	ZD111	00D2760762958	MTZJ39B T77	N		
	ZD112	00D2760645923	MTZJ22A T77			
	ZD113	00D2760762958	MTZJ39B T77	N		
	ZD114	00D2760760950	MTZJ5.6B T77			
	ZD115	00D2760762958	MTZJ39B T77			
	ZD116	00D2760762958	MTZJ39B T77	N		
	ZD117,118	00D2760645923	MTZJ22A T77			
	ZD119	00D2760762958	MTZJ39B T77	N		
CAPACITORS GROUP						
⚠	D102	00D2538022707	CK45F2EAC103MC			
⚠	D104	00D2538022707	CK45F2EAC103MC			
⚠	C100	00D2568038004	CF99--2EAC104M			
	C102	134050104206S	CE04W2G101MC(NHA)			
	C103	00D2534548706	CC45R3A102KC			
⚠	C104,105	00D2538029713	CK45F2EAC471KC(KX)			
	C106-108	134050105209S	CE04W0J562MC(NXA)			
	C110	nsp	CK73B1E104KT +1608			
	C111	nsp	CK73B0J475KT +1608			
	C112	134050106509S	CE04W1H100MT(NXA)			
	C113	nsp	CK73B1E104KT +1608			
⚠	C115	00D2538029700	CK45F2EAC222MC (KX)			
	C116	nsp	CK73B1E104KT +1608			
⚠	C117	00D2538022707	CK45F2EAC103MC			

	Ref. No.	Part No.	Part Name	Remarks	Q'ty	New
	C118	nsp	CK73B1E104KT +1608			
	C119	134050107502S	CE04W1E470MT(NXA)			
	C120-123	nsp	CK73B1E104KT +1608			
	OTHERS PARTS GROUP					
	BKT10	nsp	M3 TAP SIDE TERMINAL			
	CX102	nsp	2P BASE(35328)			
	CX105	nsp	5P 370mm TJC2508-CKM2509H			
⚠	F100	652010025001S	L=20mm 250V/T2A	U		
⚠	F100	652010024008S	L=20mm 250V/T1.6A	N		
⚠	F101	652010024008S	L=20mm 250V/T1.6A	U		
⚠	F101	0520100110080	# 0218001.MXP T1A L 250V	N		
⚠	JK100	00D2033958004	AC_INLET/E3-DIP			
⚠	L100,101	00D2390035026	L.FILTER(LF4ZBE273H)			
⚠	RL101	682010019007S	RELAY(HL31-1AT-5H)			
⚠	T100	102010022002S	SW TRANS(ST-4430A)			
	F100A	nsp	FUSE CLIP(TAPE)			
	F100B	nsp	FUSE CLIP(TAPE)			
	F101A	nsp	FUSE CLIP(TAPE)			
	F101B	nsp	FUSE CLIP(TAPE)			
		nsp	LABEL FUSE T1.6AL/250V	U : F101		
		nsp	LABEL FUSE T1.6AL/250V	N : F100		
		nsp	LABEL FUSE T1AL/250V	F101		

FRONT P.W.B UNIT ASSY

	Ref. No.	Part No.	Part Name	Remarks	Q'ty	New
SEMICONDUCTORS GROUP						
	D1001	263010045504S	BL-BVT201G			
	D1002,1003	00D2760704903	1SR35-400A(T93X)			
	D1004	00D2760760989	MTZJ7.5B T77			
	D1016	00D2760761975	MTZJ18B T77			
	D1017	00D2760762903	MTZJ24B T77			
	D1018-1020	251310004507S	CG0603MLC-12LE			
	D1026	00D2760760947	MTZJ5.1B T77			
	D1027,1028	263010046507S	BL-BUF4V5K-1-AV-FP3.5-TBF19.5C			
	D1029,1030	176010002405S	LED (SLR343BC7T)			
	D1031,1032	00D2760760947	MTZJ5.1B T77			
	D1033,1034	176010002405S	LED (SLR343BC7T)			
	D1040-1042	00D2760704903	1SR35-400A(T93X)			
	U1001	00D2680073905	ICP-N15T			
	U1002	00D2631110901	PQ070XZ01ZP +C			
	U1004	262010007707S	R94EV1A			
	U1005	262010006704S	JSR1165			
	U1006,1007	00D2631289900	AZ4580MTR-E1			
	Q1001	00D2690192902	KRC102S-RTK/P (10K-10K)			
	Q1004	00D2690192902	KRC102S-RTK/P (10K-10K)			
	Q1005	00D2730494900	KTC2022D-Y-RTF/P			
	Q1006-1008	00D2730464901	KTC3875S-GR-RTK/P			
	Q1011,1012	00D2690192902	KRC102S-RTK/P (10K-10K)			
	Q1014-1016	00D2690192902	KRC102S-RTK/P (10K-10K)			
	Q1017	00D2690184907	KRA102S-RTK/P (10K-10K)			
RESISTORS GROUP						
	R1008	00D2412387940	RD14B2E4R7JNBST			
CAPACITORS GROUP						
	C1001	nsp	CK73B1E473KT +1608			
	C1002	nsp	CK73B1H103KT (1608) +1608			
	C1003	nsp	CK73B1E473KT +1608			
	C1004,1005	nsp	CK73B1H104KT +1608			
	C1006	00D2544722981	CE04W1H100MT(GR)			
	C1007,1008	00D2544540710	CE04W1J471MC SMG/RE3			
	C1011-1014	nsp	CK73B1H104KT +1608			
	C1016	00D2544722981	CE04W1H100MT(GR)			
	C1021	nsp	CK73B1H104KT +1608			
	C1023	00D2544213940	CE04W0J221MT(SRA)			
	C1024	00D2544722981	CE04W1H100MT(GR)			
	C1025,1026	nsp	CK73B1H102KT +1608			
	C1027	nsp	CK73B1H104KT +1608			
	C1028	00D2544722981	CE04W1H100MT(GR)			
	C1029	nsp	CK73B1H104KT +1608			
	C1032,1033	nsp	CK73B1H104KT +1608			
	C1037-1042	nsp	CC73CH1H101JT +1608			
	C1043	nsp	CK73B1H104KT +1608			
	C1046	00D2544722949	CE04W1H010MT(GR)			
	C1047	00D2544722981	CE04W1H100MT(GR)			
	C1048,1049	nsp	CK73B1H104KT +1608			

	Ref. No.	Part No.	Part Name	Remarks	Q'ty	New
	C1050	nsp	CC73CH1H101JT +1608			
	C1051,1052	00D2544722981	CE04W1H100MT(GR)			
	C1053	nsp	CK73B1H103KT (1608) +1608			
	C1055	nsp	CC73CH1H101JT +1608			
	C1056	00D2544722949	CE04W1H010MT(GR)			
	C1064,1065	00D2544722981	CE04W1H100MT(GR)			
	C1067,1068	00D2544722981	CE04W1H100MT(GR)			
	C1069,1070	00D2570507976	CC73CH1H331JT +1608			
	C1072	nsp	CK73B1H104KT +1608			
	C1073	00D2544722981	CE04W1H100MT(GR)			
	C1074	nsp	CK73B1H104KT +1608			
	C1075	nsp	CK73B1E473KT +1608			
	C1076	00D2544722981	CE04W1H100MT(GR)			
	C1078	nsp	CK73B1E473KT +1608			
	C1079	nsp	CK73B1H103KT (1608) +1608			
	C1080-1089	nsp	CK73B1H104KT +1608			
	C1090,1091	00D2544722981	CE04W1H100MT(GR)			
	C1093	nsp	CK73B1H104KT +1608			
	C1096	00D2544722981	CE04W1H100MT(GR)			
OTHERS PARTS GROUP						
	L1001	nsp	E.FIL(BLM21PG221SN1)+2125			
	L1002,1003	nsp	RM73B--0R0KT +1608			
	N1001	nsp	7P BASE(5268)			
	N1002	nsp	8P CON.SOCKET(TUC-P)			
	N1003,1004	nsp	8P CON BASE(TUC-P)			
	N1005	nsp	8P CON.SOCKET(TUC-P)			
	N1006	nsp	B5B-PH-K-S (LF)(SN)			
	N1008	nsp	5P 650mm 20010HS-CKM2002HR			
	N1009	nsp	S5B-PH-K-S (LF)(SN)			
	N1012	nsp	40FMN-BTRK-A(LF)(SN)			
	N1013	nsp	S3B-PH-K-S (LF)(SN)			
	N1014-1016	nsp	B3B-PH-K-S (LF)(SN)			
	S1001-1023	00D2125611903	TACT SWITCH(TAPE H5)			
	S1024	665010017006S	PUSH SW(SSCT101)			
	S1026	663010005007S	ROT.ENCODER(EC16B24S0-ZZZ)			
	S1027	663010006000S	ROT.ENCODER(EC16B24T01D4ZZZ)			
	K1001	643010087005S	H/P JACK(PJ-612A)-NI-BK			
	K1002	643010088008S	MINI JACK(PJ-310HA-7)-NI			
	K1003	643010097002S	3P PIN JACK(RCA-328H-1-05)-NI-YWR			
	K1004	644010109007S	USB CON(USBAS-00401B014-G)			
	B1001,1002	nsp	SRA21T3-SOLD AWG20 UL1015			
	B1005	nsp	SRA21T3-SOLD AWG20 UL1015			
	Z0005-0009	nsp	STYLE PIN(SJRC-2)			
	Z1001	172010006108D	FLD(19-ST-02GINK)			
	Z1002	172010008005S	VFD(GP1261AI)			
	Z9001	nsp	HOLDER FLD SR7005 A332			
	Z9002,9003	nsp	RUBBER SHEET			
	Z9004	nsp	BUFFER 10X7 T12 CR60			

A.AUDIO P.W.B UNIT ASSY

	Ref. No.	Part No.	Part Name	Remarks	Q'ty	New
SEMICONDUCTORS GROUP						
	IC3000	00D2631289900	AZ4580MTR-E1			
	IC3003	235810045600S	R2A15220FP			
	IC3005,3006	00D2631289900	AZ4580MTR-E1			
	IC3007	00D2623727904	NJW1194V-TE1			
	IC3008-3010	00D2631289900	AZ4580MTR-E1			
	IC3011	00D2623727904	NJW1194V-TE1			
	IC3012	00D2631289900	AZ4580MTR-E1			
	ZD400	00D2760683943	UDZS3.6B-TE17			
	D3023	203050021504S	1N4007			
	D3025	203050021504S	1N4007			
	D4000-4002	203050021504S	1N4007			
	Q4001	00D2730460905	KTC2875-B-RTK/P			
	Q4002	00D2690191903	KRA104S-RTK/P (47K-47K)			
	Q4003	00D2690184907	KRA102S-RTK/P (10K-10K)			
	Q4005	00D2730460905	KTC2875-B-RTK/P			
	Q4006	00D2690193901	KRC104S-RTK/P (47K-47K)			
	Q4008	00D2730460905	KTC2875-B-RTK/P			
	Q4009	00D2690191903	KRA104S-RTK/P (47K-47K)			
	Q4010	00D2690184907	KRA102S-RTK/P (10K-10K)			
	Q4012	00D2730460905	KTC2875-B-RTK/P			
	Q4013	00D2690193901	KRC104S-RTK/P (47K-47K)			
	Q4098,4099	00D2690066902	DTC323TKT96 +C	N		
	Q4100	00D2690192902	KRC102S-RTK/P (10K-10K)	N		
	Q4101	00D2690086908	DTA114TKT96 +C	N		
	Q4102	00D2690192902	KRC102S-RTK/P (10K-10K)	N		
CAPACITORS GROUP						
	C3000	00D2544722981	CE04W1H100MT(GR)			
	C3001-3003	00D2544573981	CE04W1H100MT(RA3)			
	C3004	00D2544722981	CE04W1H100MT(GR)			
	C3005-3008	00D2544573981	CE04W1H100MT(RA3)			
	C3009-3017	00D2544722981	CE04W1H100MT(GR)			
	C3018	nsp	CC73CH1H101JT +1608			
	C3019	00D2544536931	CE04W1A221MT SMG/RE3			
	C3021	nsp	CC73CH1H221JT +1608			
	C3022	00D2544722981	CE04W1H100MT(GR)			
	C3023	133050082518S	CQ93M2A223JT(PE)			
	C3024	133050082501S	CQ93M2A682JT(PE)			
	C3025,3026	nsp	RM73B--0R0KT +1608			
	C3027	133050082518S	CQ93M2A223JT(PE)			
	C3028	133050082501S	CQ93M2A682JT(PE)			
	C3029	nsp	CC73CH1H221JT +1608			
	C3030	00D2544536931	CE04W1A221MT SMG/RE3			
	C3031	00D2544722981	CE04W1H100MT(GR)			
	C3033	nsp	CC73CH1H101JT +1608			
	C3034-3037	00D2544722981	CE04W1H100MT(GR)			
	C3038,3039	00D2544723922	CE04W1H101MT(GR)			
	C3042	nsp	CC73CH1H331JT +1608			
	C3047,3048	nsp	RM73B--0R0KT +1608			

	Ref. No.	Part No.	Part Name	Remarks	Q'ty	New
	C3049	nsp	CC73CH1H331JT +1608			
	C3053	00D2544718937	CE04W1C470MT(GR)			
	C3056	nsp	CC73CH1H331JT +1608			
	C3058	nsp	CC73CH1H331JT +1608			
	C3059	00D2544718937	CE04W1C470MT(GR)			
	C3062	00D2544718937	CE04W1C470MT(GR)			
	C3065	nsp	CC73CH1H331JT +1608			
	C3066,3067	00D2544718937	CE04W1C470MT(GR)			
	C3068	nsp	CC73CH1H331JT +1608			
	C3072	nsp	CC73CH1H331JT +1608			
	C3073,3074	00D2544718937	CE04W1C470MT(GR)			
	C3075	nsp	CC73CH1H331JT +1608			
	C3079	00D2544718937	CE04W1C470MT(GR)			
	C3080	nsp	CC73CH1H331JT +1608			
	C3081,3082	nsp	RM73B--0R0KT +1608			
	C3083	nsp	CC73CH1H331JT +1608			
	C3087,3088	nsp	CC73CH1H331JT +1608			
	C3090	00D2544722981	CE04W1H100MT(GR)			
	C3091,3092	nsp	CK73B1H103KT (1608) +1608			
	C3093	nsp	CC73CH1H680JT +1608			
	C3094	nsp	CC73CH1H101JT +1608			
	C3095-3097	00D2544722981	CE04W1H100MT(GR)			
	C3098	nsp	CK73B1H332KT +1608			
	C3099	nsp	CK73B1H104KT +1608			
	C3100	00D2544718924	CE04W1C330MT(GR)			
	C3101	00D2544722981	CE04W1H100MT(GR)			
	C3102	00D2544722978	CE04W1H4R7MT(GR)			
	C3103	00D2544722981	CE04W1H100MT(GR)			
	C3104	00D2544718924	CE04W1C330MT(GR)			
	C3105	00D2544722981	CE04W1H100MT(GR)			
	C3106	00D2544722978	CE04W1H4R7MT(GR)			
	C3107	nsp	CK73B1H104KT +1608			
	C3108	00D2544722981	CE04W1H100MT(GR)			
	C3110	00D2544722981	CE04W1H100MT(GR)			
	C3111	nsp	CK73B1H332KT +1608			
	C3112	00D2544722981	CE04W1H100MT(GR)			
	C3113,3114	nsp	CK73B1H103KT (1608) +1608			
	C3115	nsp	CC73CH1H331JT +1608			
	C3116	nsp	CC73CH1H680JT +1608			
	C3117	nsp	CC73CH1H101JT +1608			
	C3118,3119	nsp	RM73B--0R0KT +1608			
	C3120	nsp	CC73CH1H331JT +1608			
	C3121	00D2544722981	CE04W1H100MT(GR)			
	C3124	nsp	CC73CH1H331JT +1608			
	C3125	00D2544722981	CE04W1H100MT(GR)			
	C3126,3127	nsp	CK73B1H103KT (1608) +1608			
	C3128	nsp	CC73CH1H680JT +1608			
	C3129	nsp	CC73CH1H101JT +1608			
	C3130-3132	00D2544722981	CE04W1H100MT(GR)			
	C3133	nsp	CK73B1H332KT +1608			
	C3134	nsp	CK73B1H104KT +1608			
	C3135	nsp	CC73CH1H331JT +1608			
	C3136	00D2544718924	CE04W1C330MT(GR)			
	C3137	00D2544722978	CE04W1H4R7MT(GR)			
	C3138	00D2544722981	CE04W1H100MT(GR)			

	Ref. No.	Part No.	Part Name	Remarks	Q'ty	New
	C3141	nsp	CC73CH1H331JT +1608			
	C3142	00D2544722981	CE04W1H100MT(GR)			
	C3143	00D2544722978	CE04W1H4R7MT(GR)			
	C3144,3145	nsp	RM73B--0R0KT +1608			
	C3146	nsp	CC73CH1H331JT +1608			
	C3147	00D2544718924	CE04W1C330MT(GR)			
	C3148	00D2544722981	CE04W1H100MT(GR)			
	C3149	nsp	CK73B1H104KT +1608			
	C3151	00D2544722981	CE04W1H100MT(GR)			
	C3152	nsp	CK73B1H332KT +1608			
	C3153,3154	00D2544722981	CE04W1H100MT(GR)			
	C3155,3156	nsp	CK73B1H103KT (1608) +1608			
	C3158	nsp	CC73CH1H680JT +1608			
	C3159	nsp	CC73CH1H101JT +1608			
	C3160	00D2544722981	CE04W1H100MT(GR)			
	C3161,3162	nsp	CC73CH1H331JT +1608			
	C4000	00D2544722981	CE04W1H100MT(GR)			
	C4001,4002	00D2544722994	CE04W1H220MT(GR)			
	C4003	nsp	CC73CH1H331JT +1608			
	C4004	nsp	CK73B1H103KT (1608) +1608			
	C4005	nsp	CC73CH1H331JT +1608			
	C4006	00D2544722907	CE04W1H0R1MT(GR)			
	C4007-4010	00D2544722994	CE04W1H220MT(GR)			
	C4011	nsp	CC73CH1H331JT +1608			
	C4012	nsp	CK73B1H103KT (1608) +1608			
	C4013	nsp	CC73CH1H331JT +1608			
	C4014	00D2544722907	CE04W1H0R1MT(GR)			
	C4015,4016	00D2544722994	CE04W1H220MT(GR)			
	C4018	00D2544722994	CE04W1H220MT(GR)			
	C4019	nsp	CC73CH1H331JT +1608			
	C4020	nsp	CK73B1H103KT (1608) +1608			
	C4021	nsp	CC73CH1H331JT +1608			
	C4024	00D2544722994	CE04W1H220MT(GR)			
	C4026	00D2544722994	CE04W1H220MT(GR)			
	C4027	nsp	CC73CH1H331JT +1608			
	C4029	nsp	CK73B1H103KT (1608) +1608			
	C4030	nsp	CC73CH1H331JT +1608			
	C4033	00D2544722994	CE04W1H220MT(GR)			
	C4035	00D2544722994	CE04W1H220MT(GR)			
	C4036	nsp	CC73CH1H331JT +1608			
	C4037	nsp	CK73B1H103KT (1608) +1608			
	C4038	nsp	CC73CH1H331JT +1608			
	C4041	00D2544722994	CE04W1H220MT(GR)			
	C4043	00D2544722994	CE04W1H220MT(GR)			
	C4044	nsp	CC73CH1H331JT +1608			
	C4045	nsp	CK73B1H103KT (1608) +1608			
	C4046	nsp	CC73CH1H331JT +1608			
	C4049	00D2544722994	CE04W1H220MT(GR)			
	C4051	00D2544722994	CE04W1H220MT(GR)			
	C4052	nsp	CC73CH1H331JT +1608			
	C4054	nsp	CK73B1H103KT (1608) +1608			
	C4055	00D2544722981	CE04W1H100MT(GR)			
	C4056	nsp	CC73CH1H101JT +1608			
	C4057	nsp	CK73B1H103KT (1608) +1608			
	C4058	nsp	CC73CH1H101JT +1608			

	Ref. No.	Part No.	Part Name	Remarks	Q'ty	New
	C4059,4060	00D2544722981	CE04W1H100MT(GR)			
	C4061	nsp	CC73CH1H101JT +1608			
	C4062	nsp	CK73B1H103KT (1608) +1608			
	C4063	nsp	CC73CH1H101JT +1608			
	C4064	00D2544722981	CE04W1H100MT(GR)			
	C4129	00D2544722981	CE04W1H100MT(GR)	N		
	C4130	133050087537S	CQ93M2A822JT(PEF)	N		
	C4131	133050087506S	CQ93M2A472JT(PEF)	N		
	C4134	00D2544722981	CE04W1H100MT(GR)	N		
	C4135	133050087537S	CQ93M2A822JT(PEF)	N		
	C4136	133050087506S	CQ93M2A472JT(PEF)	N		
	C4143-4145	nsp	CC73CH1H101JT +1608	N		
	C4146	nsp	CC73CH1H330JT +1608	N		
	C4147,4148	nsp	CC73CH1H101JT +1608	N		
	C4149	00D2544722981	CE04W1H100MT(GR)	N		
	C4150	nsp	CK73B1H472KT +1608	N		
OTHERS PARTS GROUP						
	CN3000	nsp	33P SOCKET(C125Z2)			
	CN3001	nsp	13P 280MM PH-SAN			
	CN3002	nsp	3P 250MM PH-SAN			
	CN401	nsp	13P 220mm 20010HS-CKM2002HV			
	CP4000	645010056076S	25P PLUG(C125Z1)			
	CP4003	183010013007S	TUNER MODULE(KST-MT104MV1-2)	N		
	CP4005	612050306007S	3P 250MM PH-SAN			
	CX3000	nsp	19P SOCKET(C125Z2)			
	CX3001	nsp	13P SOCKET(C125Z2)			
	CX3002	nsp	17P SOCKET(C125Z2)			
	CX3003	nsp	15P SOCKET(C125Z2)			
	CX4000	nsp	27P PLUG(C125Z1)			
	CX4001	nsp	17P PLUG(C125Z1)			
	CX4002	nsp	15P PLUG(C125Z1)			
	CX4003	nsp	19P CON.PLUG(TWG-P)			
	JK3001,3002	643010077008S	6P PIN JACK(RCA-603B-05)-NI-RW			
	JK3003	643010078001S	2P PIN JACK(RCA-207AE-02)-NI-RW			
	JK3004	643010079004S	4P PIN JACK(RCA-405B-55)-NI-RWB			
	JK3005	643010076005S	4P PIN JACK(RCA-405B-04)-NI-RW			
	JACK4001,4002	643010076005S	4P PIN JACK(RCA-405B-04)-NI-RW			
	JACK4003	643010079004S	4P PIN JACK(RCA-405B-55)-NI-RWB			
	JACK4004	643010076005S	4P PIN JACK(RCA-405B-04)-NI-RW			
	JACK4005	643010080004S	1P PIN JACK(RCA-107A)-NI-B			
	L3000,3001	nsp	FTZ CHOKE COIL	N		
	L4000	nsp	TUNER OUTPUT FILTER(75J-207CX)	N		
	L4001	00D2350130903	CHIP EMIFIL(11A121) +1608	N		
	L4002	nsp	TUNER OUTPUT FILTER(75J-207CX)	N		

DIGITAL P.W.B UNIT ASSY

	Ref. No.	Part No.	Part Name	Remarks	Q'ty	New	
SEMICONDUCTORS GROUP							
	U0001	nsp	AD8195ACPZ				⚠2
	U0002	00D2623425905	LTC4300-2CMS8				
	U1001	234810018506S	TC74VHC4052AFT				
	U1002	236810057606S	ADV3002BSTZ				
	U1100	nsp	ADV7840BBCZ-5				⚠2
	U1101	231810090509S	PQ018ENA1ZPH				
	U1600	141810027509S	TXC 8W(48MHZ)				
	U1601	236810066600S	XC3S400A-4FGG320C				
	U1602	246810010604D	IS42S32200E-6TL				
	U1603	248810044504S	M25P40-VMN6PB(1E0D)				
	U1604-1606	00MHC007805KZ	TC74VHCT125AFT OUAD BUS BUFFER				
	U1607	231810071508S	PQ012ENB1ZPH				
	U1800	00D2623436907	TC74VHC244FT				
	U1801	236810087607S	ADV7511KSTZ				
	U1802	00MHC007805KZ	TC74VHCT125AFT OUAD BUS BUFFER				
	U1803	nsp	PI3HDMI1310-AZLE				⚠2
	U2000	231810090509S	PQ018ENA1ZPH				
	U2001	nsp	ADV7392BCPZ				⚠2
	U2002	231310009508S	PQ033DNA1ZPH				
	U2200	nsp	ABT2015BG316				⚠2
	U2201	00D2622557900	SN74LV14APW-EL2 +REF				
	U2500,2501	nsp	K4T51163QI-HCE7				⚠2
	U2800,2801	262010006704S	JSR1165				
	U2802	263010044709S	JST1165				
	U2803	00D2623077900	TC74VHCU04FT +REF				
	U2805-2807	236810062608S	LC89058W-E				
	U3000	00D2623590005	EPM240T100C5N				
	U3001	236810083506S	CS2100-10-CZZR				
	U3200	nsp	ADSP21367KSWZ2A1183				⚠2
	U3201	246810048609S	W9864G2IH-6				
	U3202	8R2481004600S	DSP ROM SUB ASSY (EN29LV160BB-70TIP)				
	U3800,3801	236810070500S	AK4424ET				
	U3802	236810086505S	AK5358BET				
	U3803	236810073509S	AK4358VQ				
	U3804-3807	00D2631289900	AZ4580MTR-E1				
	U3900	nsp	DM860				⚠2
	U3901	nsp	DM860 ROM SUB ASSY(U) (NAND01GW3B2CN6E)	U			⚠2
	U3901	nsp	DM860 ROM SUB ASSY(N) (NAND01GW3B2CN6E)	N			⚠2
	U3902	246810031601S	W9825G6EH-6J				
	U4200	00D2790055907	MICROSMD175F				
	U4201	103810002508S	PULSE-TRANS(S558-5999-U-7-F)				
	U4202	nsp	LAN8700-AEZG-TR				⚠2
	U4203	00D2623711004	SAA7121H				
	U4204	nsp	MFI341S2164 IPOD COPROCESSOR 2.0B CLASS6				⚠2
	U4600	231810069505S	AOZ1021AI				
	U4601-4605	nsp	EX3AV				
	U4606,4607	231310009508S	PQ033DNA1ZPH				⚠2
	U4608	234810015507S	BU4248F-TR				

NOTE :
When update Firmware, please confirm a last version in SDI.
Use the service board after updating it.

	Ref. No.	Part No.	Part Name	Remarks	Q'ty	New
	U5100	00D2623448908	TC74VHC125FT			
	U5101	8R2481004501S	MAIN CPU ROM SUB ASSY(AV) (EN29LV160BB-70TIP)			
	U5102	234810014504S	MC14094BDTR2G			
	U5103	00D2623437906	TC74VHCT244AFT			
	U5104	234810014504S	MC14094BDTR2G			
	U5105	00D2623410907	TC74VHCT08AFT	U		
	U5106,5107	234810014504S	MC14094BDTR2G			
	U5108	00D2623444902	TC74VHC08FT			
	U5109	234810014504S	MC14094BDTR2G			
	U5300	262010007707S	R94EV1A			
	U5301	8R2431004801S	MAIN CPU SUB ASSY(AV) (R5F64169DFD)			
	U5302	246810026500S	R1EX24256ASAS0A			
	U5500	8R2431004901S	SUB CPU SUB ASSY(AV) (R5F3650KNFB)			
	Q0001	00D2690192902	KRC102S-RTK/P (10K-10K)			
	Q0002	00D2690193901	KRC104S-RTK/P (47K-47K)			
	Q1001,1002	00D2690192902	KRC102S-RTK/P (10K-10K)			
	Q1004,1005	00D2690193901	KRC104S-RTK/P (47K-47K)			
	Q1007-1009	00D2690193901	KRC104S-RTK/P (47K-47K)			
	Q1100-1102	00D2690192902	KRC102S-RTK/P (10K-10K)			
	Q1103-1106	00D2690193901	KRC104S-RTK/P (47K-47K)			
	Q1600	00D2690193901	KRC104S-RTK/P (47K-47K)			
	Q1601	00D2690192902	KRC102S-RTK/P (10K-10K)			
	Q1800	00D2690184907	KRA102S-RTK/P (10K-10K)			
	Q1801	00D2690192902	KRC102S-RTK/P (10K-10K)			
	Q1802,1803	00D2690193901	KRC104S-RTK/P (47K-47K)			
	Q2000	00D2690193901	KRC104S-RTK/P (47K-47K)			
	Q2001	00D2750110905	HN1K02FU-TE85L			
	Q2200	00D2750110905	HN1K02FU-TE85L			
	Q2201	00D2690193901	KRC104S-RTK/P (47K-47K)			
	Q3200	00D2690192902	KRC102S-RTK/P (10K-10K)			
	Q3201	00D2690184907	KRA102S-RTK/P (10K-10K)			
	Q3900	00D2690184907	KRA102S-RTK/P (10K-10K)			
	Q3901	00D2690192902	KRC102S-RTK/P (10K-10K)			
	Q4200	00D2757001907	FDC608PZ			
	Q4201	00D2690192902	KRC102S-RTK/P (10K-10K)			
	Q4600	00D2690192902	KRC102S-RTK/P (10K-10K)			
	Q4601	00D2690193901	KRC104S-RTK/P (47K-47K)			
	Q4602	00D2690192902	KRC102S-RTK/P (10K-10K)			
	Q4603	00D2690193901	KRC104S-RTK/P (47K-47K)			
	Q4612	00D2690191903	KRA104S-RTK/P (47K-47K)			
	Q4614-4619	00D2690191903	KRA104S-RTK/P (47K-47K)			
	Q4620	00D2690192902	KRC102S-RTK/P (10K-10K)			
	Q4621	00D2757001907	FDC608PZ			
	Q4623-4628	00D2757001907	FDC608PZ			
	Q4629-4631	00D2710326904	2SA1954(B)-TE85L			
	Q4632	00MHZ2000921Y	DAN202U (ROHM)			
	Q4633,4634	00D2710326904	2SA1954(B)-TE85L			
	Q4635,4636	00D2690192902	KRC102S-RTK/P (10K-10K)			
	Q4638,4639	00D2690192902	KRC102S-RTK/P (10K-10K)			

NOTE :
When update Firmware, please confirm a last version in SDI.
Use the service board after updating it.

	Ref. No.	Part No.	Part Name	Remarks	Q'ty	New
	Q4640	00D2730464901	KTC3875S-GR-RTK/P			
	Q4643	00D2690192902	KRC102S-RTK/P (10K-10K)			
	Q4644	00D2690193901	KRC104S-RTK/P (47K-47K)			
	Q4645	00D2690192902	KRC102S-RTK/P (10K-10K)			
	Q4646	00D2690193901	KRC104S-RTK/P (47K-47K)			
	Q4647	00D2710326904	2SA1954(B)-TE85L			
	Q4648	00D2690192902	KRC102S-RTK/P (10K-10K)			
	Q5100	00D2690192902	KRC102S-RTK/P (10K-10K)			
	Q5101	00D2710326904	2SA1954(B)-TE85L			
	Q5102	00D2690192902	KRC102S-RTK/P (10K-10K)			
	Q5303-5305	00D2690192902	KRC102S-RTK/P (10K-10K)			
	Q5308	00D2690184907	KRA102S-RTK/P (10K-10K)			
	Q5309	00D2690192902	KRC102S-RTK/P (10K-10K)			
	Q5310-5313	00D2690191903	KRA104S-RTK/P (47K-47K)			
	Q5314,5315	00D2690192902	KRC102S-RTK/P (10K-10K)			
	Q5500	00D2730464901	KTC3875S-GR-RTK/P			
	Q5501	00D2690184907	KRA102S-RTK/P (10K-10K)			
	Q5502	00D2740195901	2SD2114KT196 +C			
	Q5503	00D2690192902	KRC102S-RTK/P (10K-10K)			
	Q5504	00D2730464901	KTC3875S-GR-RTK/P			
	Q5505,5506	00D2690192902	KRC102S-RTK/P (10K-10K)			
	D1001	00D2760750902	RB521S-30TE61 +REF			
	D4600,4601	00D2760794900	KDS160-RTK/P			
	D5304	00D2760794900	KDS160-RTK/P			
	D5305	00MHI20002210	SIR-34ST3F			
	D5308	00D2472013982	RM73B--474JT +1608			
	D5311	00D2760794900	KDS160-RTK/P			
	D5500	00D2760794900	KDS160-RTK/P			
RESISTORS GROUP						
	R1123-1125	1262100007557S	MNR04=472(1005X4)			
	R1146-1157	1262100002538S	MNR04=330(1005X4)			
	R1158-1161	1262100007557S	MNR04=472(1005X4)			
	R1600	1262100002538S	MNR04=330(1005X4)			
	R1601	1262100007557S	MNR04=472(1005X4)			
	R1612,1613	1262100003517S	MNR04=680(1005X4)			
	R1618	1262100003517S	MNR04=680(1005X4)			
	R1620	1262100003517S	MNR04=680(1005X4)			
	R1622	1262100003517S	MNR04=680(1005X4)			
	R1623	1262100002538S	MNR04=330(1005X4)			
	R1625-1636	1262100002538S	MNR04=330(1005X4)			
	R1641-1643	1262100002538S	MNR04=330(1005X4)			
	R1647-1660	1262100002538S	MNR04=330(1005X4)			
	R1800,1801	1262100002538S	MNR04=330(1005X4)			
	R2200	1262100002538S	MNR04=330(1005X4)			
	R2202-2207	1262100002538S	MNR04=330(1005X4)			
	R2215	1262100008536S	MNR04=103(1005X4)			
	R2218-2221	1262100008536S	MNR04=103(1005X4)			
	R2245,2246	1262100007557S	MNR04=472(1005X4)			
	R2274	1262100007557S	MNR04=472(1005X4)			

	Ref. No.	Part No.	Part Name	Remarks	Q'ty	New	
	R2278-2283	126210002538S	MNR04=330(1005X4)				
	R2845-2847	126210008536S	MNR04=103(1005X4)				
	R2854-2857	126210002538S	MNR04=330(1005X4)				
	R3002,3003	126210003555S	MNR04=101(1005X4)				
	R3006-3009	126210003555S	MNR04=101(1005X4)				
	R3011	126210003555S	MNR04=101(1005X4)				
	R3013	126210003555S	MNR04=101(1005X4)				
	R3021	126210003555S	MNR04=101(1005X4)				
	R3201	126210002538S	MNR04=330(1005X4)				
	R3204	126210008536S	MNR04=103(1005X4)				
	R3210	126210001504S	MNR04=000(1005X4)				
	R3211,3212	126210008536S	MNR04=103(1005X4)				
	R3214,3215	126210008536S	MNR04=103(1005X4)				
	R3217	126210003593S	MNR04=151(1005X4)				
	R3221	126210001504S	MNR04=000(1005X4)				
	R3222	126210008536S	MNR04=103(1005X4)				
	R3223,3224	126210001504S	MNR04=000(1005X4)				
	R3225	126210003593S	MNR04=151(1005X4)				
	R3226	126210001504S	MNR04=000(1005X4)				
	R3229	126210001504S	MNR04=000(1005X4)				
	R3231,3232	126210001504S	MNR04=000(1005X4)				
	R3236-3241	126210002538S	MNR04=330(1005X4)				
	R3245,3246	126210002538S	MNR04=330(1005X4)				
	R3268-3275	126210003517S	MNR04=680(1005X4)				
	R3276,3277	126210001504S	MNR04=000(1005X4)				
	R3278,3279	126210002538S	MNR04=330(1005X4)				
	R3902-3904	126210002538S	MNR04=330(1005X4)				
	R3905,3906	126210008536S	MNR04=103(1005X4)				
	R3908,3909	126210008536S	MNR04=103(1005X4)				
	R3913	126210008536S	MNR04=103(1005X4)				
	R3919	126210008536S	MNR04=103(1005X4)				
	R3932	126210007557S	MNR04=472(1005X4)				
	R3937	126210002538S	MNR04=330(1005X4)				
	R3939-3942	126210002538S	MNR04=330(1005X4)				
	R3945,3946	126210002538S	MNR04=330(1005X4)				
	R3949,3950	126210002538S	MNR04=330(1005X4)				
	R4216-4218	126210002538S	MNR04=330(1005X4)				
	R4225	126210009591S	MNR04=473(1005X4)				
	R4228	126210009591S	MNR04=473(1005X4)				
	R4903	nsp	RM73B--103JT +1005	U			⚠2
	R4903	nsp	RM73B--472JT+1005	N			⚠2
	R5111	nsp	RM73B--330JT +1005	N			⚠2
	R5112	nsp	RM73B--330JT +1005	U			⚠2
	R5135	126210001504S	MNR04=000(1005X4)				
	R5332	nsp	RM73B--103JT +1608	U			⚠2
	R5340	nsp	RM73B--103JT +1608	N			⚠2
	R5341	126210002538S	MNR04=330(1005X4)				
	R5343	126210002538S	MNR04=330(1005X4)				
	R5347	126210002538S	MNR04=330(1005X4)				
	R5349	126210002538S	MNR04=330(1005X4)				
	R5358,5359	126210002538S	MNR04=330(1005X4)				
	R5363	126210002538S	MNR04=330(1005X4)				

	Ref. No.	Part No.	Part Name	Remarks	Q'ty	New
CAPACITORS GROUP						
	C007	nsp	CK73B1H102KT +1005			
	C009	nsp	CK73B1H102KT +1005			
	C0001-0005	nsp	CK73B1A104KT +1005			
	C0006	nsp	CK73X5R0J106MT(2125)			
	C0008	nsp	CK73B1E103KT(1005)			
	C0010-0020	nsp	CK73X5R0J106MT(2125)			
	C0021,0022	nsp	CK73B1A104KT +1005			
	C1001,1002	134050100501S	CE67C0J101MT(MVG)			
	C1003-1008	nsp	CK73B1A104KT +1005			
	C1009	nsp	CK73B0J475KT +1608			
	C1015	nsp	CK73B1H102KT +1005			
	C1016,1017	nsp	CC73CH1H220JT +1005			
	C1100-1106	nsp	CK73B1A104KT +1005			
	C1107	nsp	CK73B1E103KT(1005)			
	C1108,1109	nsp	CK73B1A104KT +1005			
	C1110	nsp	CC73CH1H120JT +1005			
	C1111-1113	nsp	CK73B1A104KT +1005			
	C1114	nsp	CC73CH1H120JT +1005			
	C1115,1116	nsp	CC73CH1H150JT +1005			
	C1117	nsp	CK73B1H102KT +1005			
	C1118	nsp	CK73B0J475KT +1608			
	C1121-1124	nsp	CK73B1A104KT +1005			
	C1125	nsp	CK73B0J475KT +1608			
	C1126	nsp	CK73B1A104KT +1005			
	C1128-1132	nsp	CK73B1A104KT +1005			
	C1133	nsp	CK73B0J475KT +1608			
	C1134	nsp	CK73B1A104KT +1005			
	C1137	nsp	CK73B1A104KT +1005			
	C1139	nsp	CK73B1A104KT +1005			
	C1141-1143	nsp	CK73X5R0J106MT(2125)			
	C1145	nsp	CK73B1A104KT +1005			
	C1156,1157	nsp	CK73B1A104KT +1005			
	C1159	nsp	CK73X5R0J106MT(2125)			
	C1160	nsp	CK73B1A104KT +1005			
	C1162	nsp	CK73B1C823KT +1608			
	C1163	nsp	CK73B1H103KT (1608) +1608			
	C1164	nsp	CK73B1A824KT +1608			
	C1165	nsp	CK73B1E393KT(1608)			
	C1166,1167	nsp	CK73B1E103KT(1005)			
	C1168	nsp	CK73B0J475KT +1608			
	C1171	nsp	CK73B1A104KT +1005			
	C1172	nsp	CK73B0J475KT +1608			
	C1173,1174	nsp	CK73B1A104KT +1005			
	C1175	nsp	CK73X5R0J106MT(2125)			
	C1176-1180	nsp	CK73B1A104KT +1005			
	C1182-1187	nsp	CK73B1A104KT +1005			
	C1188	nsp	CK73B0J475KT +1608			
	C1190	nsp	CK73B1A104KT +1005			

	Ref. No.	Part No.	Part Name	Remarks	Q'ty	New
	C1193,1194	nsp	CK73B1A104KT +1005			
	C1196,1197	nsp	CK73B1A104KT +1005			
	C1200	nsp	CK73B1A104KT +1005			
	C1201	nsp	CK73B0J475KT +1608			
	C1204	nsp	CK73B1A104KT +1005			
	C1207	nsp	CK73B1A104KT +1005			
	C1208	nsp	CK73B0J475KT +1608			
	C1209	nsp	CK73B1A104KT +1005			
	C1213,1214	nsp	CK73B1A104KT +1005			
	C1217,1218	nsp	CK73B1A104KT +1005			
	C1219	nsp	CK73B0J475KT +1608			
	C1222	nsp	CK73B1A104KT +1005			
	C1237	nsp	CK73B1H102KT +1005			
	C1238	nsp	CK73B0J475KT +1608			
	C1239	00D2544651900	CE04W0J331MT F11(KY)			
	C1600	nsp	CK73B0J475KT +1608			
	C1602	nsp	CK73B1A104KT +1005			
	C1607-1614	nsp	CK73B1A104KT +1005			
	C1615	nsp	CK73B1H102KT +1005			
	C1616	nsp	CK73B0J475KT +1608			
	C1619-1631	nsp	CK73B1A104KT +1005			
	C1633	nsp	CK73B1A104KT +1005			
	C1635-1646	nsp	CK73B1A104KT +1005			
	C1650,1651	nsp	CK73B1A104KT +1005			
	C1653	nsp	CK73B0J475KT +1608			
	C1658	nsp	CK73B0J475KT +1608			
	C1662	nsp	CK73B0J475KT +1608			
	C1664	nsp	CK73B0J475KT +1608			
	C1665-1667	nsp	CK73B1A104KT +1005			
	C1669	nsp	CK73B1A104KT +1005			
	C1670	nsp	CK73B0J475KT +1608			
	C1800,1801	nsp	CK73B1A104KT +1005			
	C1802	nsp	CK73X5R0J106MT(2125)			
	C1805-1808	nsp	CK73B1A104KT +1005			
	C1809	nsp	CK73X5R0J106MT(2125)			
	C1812-1815	nsp	CK73B1A104KT +1005			
	C1816	nsp	CK73B0J475KT +1608			
	C1819,1820	nsp	CK73B1A104KT +1005			
	C1821	nsp	CK73X5R0J106MT(2125)			
	C1824-1833	nsp	CK73B1A104KT +1005			
	C1834-1836	nsp	CK73B1A105KT +1608			
	C1839	00D2544651900	CE04W0J331MT F11(KY)			
	C2000	nsp	CK73B1A104KT +1005			
	C2001	nsp	CK73B0J475KT +1608			
	C2004-2007	nsp	CK73B1A104KT +1005			
	C2010	nsp	CK73B1H102KT +1005			
	C2011	nsp	CK73B0J475KT +1608			
	C2012	nsp	CK73B1H222KT +1005			
	C2013,2014	nsp	CK73B1A104KT +1005			
	C2016	nsp	CK73B1H123KT +1608			
	C2018	nsp	CK73B1A104KT +1005			
	C2020	nsp	CK73B1A154KT +1608			

	Ref. No.	Part No.	Part Name	Remarks	Q'ty	New
	C2200	nsp	CC73CH1H5R0CT +1005			
	C2201	nsp	CK73B0J475KT +1608			
	C2204	nsp	CK73B1A104KT +1005			
	C2206	nsp	CK73B1A104KT +1005			
	C2208	nsp	CK73B1A104KT +1005			
	C2210	nsp	CK73B1A104KT +1005			
	C2212	nsp	CK73B1A104KT +1005			
	C2214	nsp	CK73B1A104KT +1005			
	C2216	nsp	CK73B1A104KT +1005			
	C2218	nsp	CK73B1A104KT +1005			
	C2220	nsp	CK73B1A104KT +1005			
	C2221	nsp	CK73B0J475KT +1608			
	C2222	nsp	CK73B1A104KT +1005			
	C2224	nsp	CK73B1A104KT +1005			
	C2227	nsp	CK73B1A104KT +1005			
	C2237	nsp	CK73B0J475KT +1608			
	C2241-2247	nsp	CK73B1A104KT +1005			
	C2254-2259	nsp	CK73B1A104KT +1005			
	C2260	nsp	CK73B0J475KT +1608			
	C2263	nsp	CK73B1A104KT +1005			
	C2265-2270	nsp	CK73B1A104KT +1005			
	C2279	nsp	CK73B1A104KT +1005			
	C2280	nsp	CK73B0J475KT +1608			
	C2282	nsp	CK73B1A104KT +1005			
	C2283	nsp	CK73B0J475KT +1608			
	C2285	nsp	CK73B1A104KT +1005			
	C2286	nsp	CK73B0J475KT +1608			
	C2287,2288	nsp	CC73CH1H8R0DT +1005			
	C2290	nsp	CK73B1A104KT +1005			
	C2500-2502	nsp	CK73B1A104KT +1005			
	C2503	nsp	CK73B0J475KT +1608			
	C2505	nsp	CK73B1A104KT +1005			
	C2506	nsp	CK73B0J475KT +1608			
	C2508-2516	nsp	CK73B1A104KT +1005			
	C2524-2526	nsp	CK73B1A104KT +1005			
	C2527	nsp	CK73B0J475KT +1608			
	C2529	nsp	CK73B1A104KT +1005			
	C2530	nsp	CK73B0J475KT +1608			
	C2532-2540	nsp	CK73B1A104KT +1005			
	C2800-2802	nsp	CK73B1A104KT +1005			
	C2805-2809	nsp	CK73B1E103KT(1005)			
	C2810	nsp	CK73B0J475KT +1608			
	C2811-2824	nsp	CK73B1A104KT +1005			
	C2825,2826	nsp	CC73CH1H100DT +1005			
	C2827-2832	nsp	CK73B1A104KT +1005			
	C2833	nsp	CK73B0J475KT +1608			
	C2835	nsp	CK73B1H102KT +1005			
	C2836	nsp	CK73B1A104KT +1005			
	C2837	nsp	CK73B1H102KT +1005			
	C2838	nsp	CK73B1A104KT +1005			
	C2839	nsp	CK73B1H102KT +1005			
	C2840	nsp	CK73B1A104KT +1005			

	Ref. No.	Part No.	Part Name	Remarks	Q'ty	New
	C2841-2843	nsp	CK73B1E223KT +1608			
	C2844-2849	nsp	CK73B1A104KT +1005			
	C3000-3005	nsp	CK73B1A104KT +1005			
	C3006	nsp	CK73B0J475KT +1608			
	C3007	nsp	CK73B1H102KT +1005			
	C3008,3009	nsp	CC73CH1H101JT +1005			
	C3010,3011	nsp	CK73B1A104KT +1005			
	C3012	nsp	CK73B0J475KT +1608			
	C3013	nsp	CK73B1H102KT +1005			
	C3014	nsp	CC73CH1H101JT +1005			
	C3200-3209	nsp	CK73B1A104KT +1005			
	C3218-3240	nsp	CK73B1A104KT +1005			
	C3241	nsp	CK73B0J475KT +1608			
	C3242	nsp	CK73B1A104KT +1005			
	C3243	nsp	CK73B0J475KT +1608			
	C3244	nsp	CK73B1A104KT +1005			
	C3247-3252	nsp	CK73B1A104KT +1005			
	C3253	nsp	CK73B0J475KT +1608			
	C3254-3259	nsp	CK73B1A104KT +1005			
	C3260-3262	nsp	CK73B0J475KT +1608			
	C3264	nsp	CK73B1A104KT +1005			
	C3265,3266	nsp	CC73CH1H7R0DT +1005			
	C3267-3280	nsp	CK73B1A104KT +1005			
	C3800-3803	nsp	CK73B1A105KT +1608			
	C3804	nsp	CK73B1A104KT +1005			
	C3806-3809	nsp	CK73B0J475KT +1608			
	C3810-3813	nsp	CK73B1H222KT +1608			
	C3814	nsp	CK73B0J475KT +1608			
	C3816	nsp	CK73B1A105KT +1608			
	C3817	nsp	CK73B1A104KT +1005			
	C3818	nsp	CK73B0J475KT +1608			
	C3819	nsp	CK73B1A105KT +1608			
	C3820,3821	nsp	CK73B1A104KT +1005			
	C3822-3841	nsp	CK73B1H102KT +1005			
	C3842,3843	134050101504S	CE67C1C100MT(MV)			
	C3844	nsp	CK73B1A104KT +1005			
	C3845,3846	nsp	CK73B1H472KT +1608			
	C3847	nsp	CK73B1A104KT +1005			
	C3848	nsp	CK73B0J475KT +1608			
	C3849	134050101511S	CE67C1C101MT(MVG)			
	C3850,3851	nsp	CK73B1H392KT +1608			
	C3852	nsp	CK73B1H272KT +1608			
	C3853-3855	nsp	CK73B1H392KT +1608			
	C3856,3857	nsp	CK73B1H272KT +1608			
	C3858-3873	nsp	CC73CH1H471JT +1608			
	C3874,3875	134050101511S	CE67C1C101MT(MVG)			
	C3878	nsp	CK73B1H102KT +1005			
	C3900	nsp	CK73B1H102KT +1005			
	C3901,3902	nsp	CC73CH1H120JT +1005			
	C3904-3907	nsp	CK73B0J475KT +1608			
	C3908-3918	nsp	CK73B1A104KT +1005			
	C3923	nsp	CK73B0J475KT +1608			

	Ref. No.	Part No.	Part Name	Remarks	Q'ty	New
	C3926-3929	nsp	CK73B0J475KT +1608			
	C3930-3939	nsp	CK73B1A104KT +1005			
	C3944	nsp	CK73B0J475KT +1608			
	C3947	nsp	CK73B0J475KT +1608			
	C3950-3958	nsp	CK73B1A104KT +1005			
	C4200	nsp	CK73B1H102KT +1005			
	C4201	nsp	CK73B1A104KT +1005			
	C4202	nsp	CK73B1E223KT +1608			
	C4203	nsp	CK73B1H102KT +1005			
	C4204	nsp	CK73B0J475KT +1608			
	C4205	nsp	CK73B1H102KT +1005			
	C4206	nsp	CK73B0J475KT +1608			
	C4207,4208	nsp	CC73CH1H150JT +1005			
	C4209	nsp	CK73B1H102KT +1005			
	C4210,4211	nsp	CK73B1A104KT +1005			
	C4213	nsp	CK73B0J475KT +1608			
	C4215,4216	nsp	CK73B0J475KT +1608			
	C4218	nsp	CK73B0J475KT +1608			
	C4219-4222	nsp	CK73B1A104KT +1005			
	C4223	nsp	CK73B1H102KT +1005			
	C4224,4225	nsp	CK73B1A104KT +1005			
	C4226	nsp	CK73B0J475KT +1608			
	C4228,4229	nsp	CK73B1A104KT +1005			
	C4234	nsp	CK73B0J475KT +1608			
	C4243-4247	nsp	CK73B1A104KT +1005			
	C4248,4249	nsp	CC73CH1H010CT +1005			
	C4600-4604	nsp	CK73B1A104KT +1005			
	C4610	nsp	CK73B1A104KT +1005			
	C4618	nsp	CK73X5R0J106MT(2125)			
	C4622-4627	nsp	CK73X5R0J106MT(2125)			
	C4628-4632	nsp	CK73B1E103KT(1005)			
	C4633-4637	nsp	CK73B1A104KT +1005			
	C4638-4647	nsp	CK73X5R0J106MT(2125)			
	C4648	nsp	CK73B1H222KT +1608			
	C4649,4650	nsp	CK73X5R0J106MT(2125)			
	C4651-4655	nsp	CC73CH1H150JT +1005			
	C4656	nsp	CK73X5R0J106MT(2125)			
	C4668	nsp	CK73B1E103KT(1005)			
	C4670-4675	nsp	CK73B1E103KT(1005)			
	C4676	nsp	CK73B1A104KT +1005			
	C4678-4684	nsp	CK73B1A104KT +1005			
	C4717,4718	nsp	CK73B1A105KT +1608			
	C4727,4728	nsp	CK73B1A105KT +1608			
	C4785	nsp	CK73B1H153KT +1608			
	C4791	134050100518S	CE67C0J471MT(MV)			
	C4792,4793	nsp	CK73B1A104KT +1005			
	C4795	nsp	CK73B1A105KT +1608			
	C4796,4797	nsp	CK73B1A104KT +1005			
	C4800	nsp	CK73B1A104KT +1005			
	C4803	nsp	CK73B1H102KT +1005			
	C4914-4923	nsp	CK73B1A104KT +1005			
	C4925	nsp	CK73B1A104KT +1005			

	Ref. No.	Part No.	Part Name	Remarks	Q'ty	New
	C4927	nsp	CK73B1A104KT +1005			
	C5100	nsp	CK73B1A104KT +1005			
	C5101	nsp	CK73B1H102KT +1005			
	C5102	nsp	CK73B1A104KT +1005			
	C5104	nsp	CK73B1A104KT +1005			
	C5106-5108	nsp	CK73B1A104KT +1005			
	C5109	nsp	CK73B1A104KT +1005	U		
	C5110-5113	nsp	CK73B1A104KT +1005			
	C5306	nsp	CK73B0J475KT +1608			
	C5308	nsp	CK73B0J475KT +1608			
	C5310-5312	nsp	CK73B1A104KT +1005			
	C5313	nsp	CK73B0J475KT +1608			
	C5319	nsp	CK73B0J475KT +1608			
	C5320	nsp	CK73B1A104KT +1005			
	C5321,5322	nsp	CC73CH1H100DT +1005			
	C5323-5327	nsp	CK73B1A104KT +1005			
	C5500	nsp	CK73B1A104KT +1005			
	C5502,5503	nsp	CC73CH1H100DT +1608			
	C5504,5505	nsp	CK73B1A104KT +1005			
	C5506	nsp	CK73B0J475KT +1608			
	C5513	nsp	CK73B1A104KT +1005			
	C5515	nsp	CK73B1A104KT +1005			
	C5516	nsp	CK73B1H221KT +1005			
	C5517	nsp	CK73B1A104KT +1005			
	C9064	nsp	CC73CH1H5R0CT +1005			
	C9068	nsp	CC73CH1H5R0CT +1005			
OTHERS PARTS GROUP						
	L1100	nsp	CHIP EMIFIL(11A121) +1608			
	L1101	nsp	E.FIL(BLM21PG221SN1)+2125			
	L1600,1601	nsp	E.FIL(BLM21PG221SN1)+2125			
	L1800-1802	nsp	INDUCTOR(FLC32C220K)+3216			
	L1804	nsp	RM73B2B0R0KT +3216			
	L2200	nsp	INDUCTOR(FLC32C220K)+3216			
	L2203-2205	nsp	INDUCTOR(FLC32C220K)+3216			
	L2500,2501	nsp	INDUCTOR(FLC32C220K)+3216			
	L3000	nsp	CHIP EMIFIL(11A121) +1608			
	L3900-3902	nsp	E.FIL(BLM21PG221SN1)+2125			
	L4200,4201	nsp	DLW21SN900HQ2L			
	L4202-4206	nsp	E.FIL(BLM21PG221SN1)+2125			
	L4208	nsp	CHIP EMIFIL(11A121) +1608			
	L4211	nsp	RM73B--0R0KT +2125			
	L4212	nsp	DLW21SN181SQ2L			
	L4600-4611	nsp	E.FIL(BLM21PG221SN1)+2125			
	L4612	nsp	INDUCTOR 10UH(7E10H)			
	L4613,4614	nsp	E.FIL(BLM21PG221SN1)+2125			
	L4619,4620	nsp	RM73B--0R0KT +2125			
	L4625-4627	nsp	E.FIL(BLM21PG221SN1)+2125			
	L4628	nsp	CHIP EMIFIL(11A121) +1608			
	L4981	nsp	RM73B--0R0KT +1608			
	L4989	nsp	RM73B--0R0KT +1608			

	Ref. No.	Part No.	Part Name	Remarks	Q'ty	New	
	L5040	nsp	RM73B--0R0KT +2125				
	N0001	nsp	23P FFC BASE(9610SCA				
	N1001	nsp	23P FFC BASE(9610SCA				
	N1800,1801	644010108608S	HDMI CONNECTOR(YKF45-7074N)				⚠2
	N4200	nsp	RJ-45 JACK(GND)				
	N4201	nsp	5P BASE(STRAIGHT)				
	N4610	nsp	5P BASE(SMW250)				
	N4907	nsp	25P SOCKET(C125Z2)				
	N4908	nsp	11P SOCKET(C125Z2)				
	N4909	nsp	40FMN-BMTTR-A-TBT(LF)(SN)				
	N4910	nsp	19P SOCKET(C125Z2)				
	N4911	nsp	17P SOCKET(C125Z2)				
	N4912	nsp	13P SOCKET(C125Z2)				
	N4913	nsp	19P SOCKET(C125Z2)				
	N4914	nsp	17P SOCKET(C125Z2)				
	N4916	nsp	33P SOCKET(C125Z2)				
	K0001	644010108608S	HDMI CONNECTOR(YKF45-7074N)				⚠2
	K1001,1002	644010108608S	HDMI CONNECTOR(YKF45-7074N)				⚠2
	K1100-1102	644010108608S	HDMI CONNECTOR(YKF45-7074N)				⚠2
	K2800	643010092007S	2P PIN JACK(RCA-206A-07)-NI-B				
	K5302	643010086002S	MINI JACK(PJ-308-02)				
	X1102,1103	141810044504S	FCX-04(28.6363MHZ)				
	X2201	141810045507S	FCX-04(27MHZ)				
	X2801	141810046500S	FCX-04(24.576MHZ)				
	X3201	141810047503S	FCX-04(20.815MHZ)				
	X3900	141810035517S	FCX-05(24.000MHz) 15ppm				
	X5301	141810048506S	FCX-04(16MHZ)				
	X5501	141810048506S	FCX-04(16MHZ)				

BALANCE OUT P.W.B UNIT ASSY

	Ref. No.	Part No.	Part Name	Remarks	Q'ty	New
SEMICONDUCTORS GROUP						
	U4000-4005	00D2631289900	AZ4580MTR-E1			
	U4007,4008	00D2631289900	AZ4580MTR-E1			
	U4100-4106	00D2631289900	AZ4580MTR-E1			
	U4107	00D2630995004	NJM4556AD +T			
	U4108,4109	00D2631289900	AZ4580MTR-E1			
	U8001	00D2630801004	NJM7812FA(S)			
	Q4050,4051	00D2710320900	KTA1517-GR-RTK/P			
	Q4052-4055	00D2730481900	KTC3911S-GR-RTK/P			
	Q4056-4059	00D2710320900	KTA1517-GR-RTK/P			
	Q4060-4063	00D2730481900	KTC3911S-GR-RTK/P			
	Q4064-4067	00D2710320900	KTA1517-GR-RTK/P			
	Q4068-4071	00D2730481900	KTC3911S-GR-RTK/P			
	Q4072-4075	00D2710320900	KTA1517-GR-RTK/P			
	Q4076-4079	00D2730481900	KTC3911S-GR-RTK/P			
	Q4080-4083	00D2710320900	KTA1517-GR-RTK/P			
	Q4084-4087	00D2730481900	KTC3911S-GR-RTK/P			
	Q4088-4091	00D2710320900	KTA1517-GR-RTK/P			
	Q4092-4095	00D2730481900	KTC3911S-GR-RTK/P			
	Q4096,4097	00D2710320900	KTA1517-GR-RTK/P			
	Q4500	00D2690192902	KRC102S-RTK/P (10K-10K)			
	Q4501	00D2690184907	KRA102S-RTK/P (10K-10K)			
	Q4502	00D2690192902	KRC102S-RTK/P (10K-10K)			
	Q4503	00D2710305909	KTA1504S-Y-RTK/P			
	Q4504	00D2690192902	KRC102S-RTK/P (10K-10K)			
	Q4505	00D2690184907	KRA102S-RTK/P (10K-10K)			
	Q4506	00D2690192902	KRC102S-RTK/P (10K-10K)			
	Q4507	00D2690184907	KRA102S-RTK/P (10K-10K)			
	Q4508	00D2690192902	KRC102S-RTK/P (10K-10K)			
	Q4509	00D2710305909	KTA1504S-Y-RTK/P			
	Q4510	00D2690192902	KRC102S-RTK/P (10K-10K)			
	Q4511	00D2710305909	KTA1504S-Y-RTK/P			
	Q4512	00D2690192902	KRC102S-RTK/P (10K-10K)			
	Q4513	00D2690184907	KRA102S-RTK/P (10K-10K)			
	Q4514	00D2690192902	KRC102S-RTK/P (10K-10K)			
	Q4515-4517	00D2690184907	KRA102S-RTK/P (10K-10K)			
	Q4521,4522	00D2690192902	KRC102S-RTK/P (10K-10K)			
	Q8001	00D2730464901	KTC3875S-GR-RTK/P			
	Q8002	00D2710305909	KTA1504S-Y-RTK/P			
	D4020-4035	00D2760794900	KDS160-RTK/P			
	D4400-4418	00D2760794900	KDS160-RTK/P			
	D4804	00D2760704903	1SR35-400A(T93X)			
	D4805	00D2760798948	UDZS8.2B-TE17			
	D8001	00D2760855001	D3SB20-7103			
	D8002,8003	00D2760683969	UDZS12B-TE17 +C			
	D8004-8007	00D2760794900	KDS160-RTK/P			
	D8008-8011	00D2760704903	1SR35-400A(T93X)			
RESISTORS GROUP						
	R4121-4128	00MGG0510016X	10 OHM +- 5% 1/6W			
	R4820	124050016524S	RS14B3D471JNBST			

	Ref. No.	Part No.	Part Name	Remarks	Q'ty	New
CAPACITORS GROUP						
	C4065,4066	00MOA47602521	47 UF M 25V RA-2			
	C4067,4068	nsp	CC73CH1H101JT +1608			
	C4069-4072	00D2544573994	CE04W1H220MT(RA3)			
	C4073,4074	nsp	CC73CH1H471JT +1608			
	C4075,4076	nsp	CC73CH1H101JT +1608			
	C4079-4082	00D2544569937	CE04W1E221MT(RA3)			
	C4085,4086	nsp	CC73CH1H471JT +1608			
	C4087,4088	nsp	CC73CH1H101JT +1608			
	C4089-4092	00D2544573994	CE04W1H220MT(RA3)			
	C4093,4094	nsp	CC73CH1H101JT +1608			
	C4095-4098	00MOA47602521	47 UF M 25V RA-2			
	C4099,4100	nsp	CC73CH1H101JT +1608			
	C4101-4104	00D2544573994	CE04W1H220MT(RA3)			
	C4105,4106	nsp	CC73CH1H471JT +1608			
	C4107,4108	nsp	CC73CH1H101JT +1608			
	C4111-4114	00D2544569937	CE04W1E221MT(RA3)			
	C4117,4118	nsp	CC73CH1H471JT +1608			
	C4119,4120	nsp	CC73CH1H101JT +1608			
	C4121-4124	00D2544573994	CE04W1H220MT(RA3)			
	C4125,4126	nsp	CC73CH1H101JT +1608			
	C4127,4128	00MOA47602521	47 UF M 25V RA-2			
	C4129-4144	nsp	CK73B1E223KT +1608			
	C4400-4410	nsp	CK73B1E104KT +1608			
	C4411-4431	00D2544574919	CE04W1H470MT(RA3)			
	C4432,4433	00D2544573994	CE04W1H220MT(RA3)			
	C4436-4439	00D2544573994	CE04W1H220MT(RA3)			
	C4442,4443	00D2544573994	CE04W1H220MT(RA3)			
	C4446,4447	00D2544573994	CE04W1H220MT(RA3)			
	C4448,4449	00D2544573981	CE04W1H100MT(RA3)			
	C4452,4453	00D2544577945	CE04W1C101MT(RA3)			
	C4501-4508	nsp	CK73B1E104KT +1608			
	C4511-4516	00D2544574919	CE04W1H470MT(RA3)			
	C4517,4518	00D2544573994	CE04W1H220MT(RA3)			
	C4800,4801	00D2544573994	CE04W1H220MT(RA3)			
	C4802,4803	nsp	CC73CH1H331JT +1608			
	C4804,4805	00D2544573994	CE04W1H220MT(RA3)			
	C4806,4807	nsp	CC73CH1H331JT +1608			
	C4808,4809	nsp	CK73B1H103KT (1608) +1608			
	C4810	00D2544578711	CE04W1C222MC(RA3)			
	C4811	00D2544722981	CE04W1H100MT(GR)			
	C4900,4901	nsp	CC73CH1H221JT +1608			
	C4902	nsp	CC73CH1H102JT +1608			
	C4903,4904	nsp	CC73CH1H221JT +1608			
	C4905	nsp	CC73CH1H102JT +1608			
	C4906,4907	nsp	CC73CH1H221JT +1608			
	C4908	nsp	CC73CH1H102JT +1608			
	C4909,4910	nsp	CC73CH1H221JT +1608			
	C4911	nsp	CC73CH1H102JT +1608			
	C4912,4913	nsp	CC73CH1H221JT +1608			
	C4914	nsp	CC73CH1H102JT +1608			
	C4915,4916	nsp	CC73CH1H221JT +1608			
	C4917	nsp	CC73CH1H102JT +1608			

	Ref. No.	Part No.	Part Name	Remarks	Q'ty	New
	C4918,4919	nsp	CC73CH1H221JT +1608			
	C4920	nsp	CC73CH1H102JT +1608			
	C4921,4922	nsp	CC73CH1H221JT +1608			
	C4923	nsp	CC73CH1H102JT +1608			
	C4924,4925	nsp	CC73CH1H221JT +1608			
	C4926	nsp	CC73CH1H102JT +1608			
	C4951-4959	nsp	CK73B1H103KT (1608) +1608			
	C8001-8003	00MOF15103541	APSV 103J 0.01UF(TP) 100V PP			
	C8004,8005	00MOB33802570	3300U 25V(ALP) (LF)-BLOCK CAP			
	C8008-8011	00D2544703706	CE04W1H101MC(RFS#A)			
	C8012	00D2544721995	CE04W1V102MT(GR)			
	C8013	00D2544723922	CE04W1H101MT(GR)			
OTHERS PARTS GROUP						
⚠	F8000	652010024008S	L=20mm 250V/T1.6A			
⚠	F8010	652010024008S	L=20mm 250V/T1.6A			
	H8001,8002	nsp	FUSE CLIP(TAPE)			
	H8011,8012	nsp	FUSE CLIP(TAPE)			
	N4001	nsp	B13B-PH-K-S (LF)(SN)			
	N4002	nsp	B3B-PH-K-S (LF)(SN)			
	N4003	nsp	B12B-PH-K-S (LF)(SN)			
	N4004	nsp	B15B-PH-K-S (LF)(SN)			
	N4005	nsp	13P BASE(STRAIGHT)			
	N4006	nsp	B3B-PH-K-S (LF)(SN)			
	N4008	nsp	B7B-PH-K-S (LF)(SN)			
	N4009	nsp	B11B-PH-K-S (LF)(SN)			
	N4800	nsp	7P 170MM PH-SAN			
	N4801	nsp	11P 170MM PH-SAN			
	N4802	nsp	19P CON.BASE(TWG-P)			
	N4900	nsp	S12B-PH-K-S (LF)(SN)			
	N4901	nsp	S15B-PH-K-S (LF)(SN)			
	N8001,8002	nsp	6P PIN HEADER(6035)			
	N8003	nsp	3P BASE(35328)			
	S4000-4018	682010021000S	RELAY(BC3-12)			
	K4800	643010076005S	4P PIN JACK(RCA-405B-04)-NI-RW			
	K4900-4908	643010096009S	XLR-301P-A(S191)			*
	B4001,4002	nsp	M3 SCREW TERMINAL			
	B4900-4902	nsp	BRACKET M3 TERMINAL AV7005 A332			
	B4903	nsp	M3 SCREW TERMINAL			
	B4906	nsp	BRACKET PCB MTG			
	Z4001	nsp	STYLE PIN(SJRC-2)			
	Z4901	nsp	STYLE PIN(SJRC-2)			
	Z8001	nsp	HEAT SINK			
		nsp	SCREW			